RAINBOW ELECTRONICS

TABLE OF CONTENTS

Your Number #1 Source for Resistance Welding & Machining Services

Rainbow Electronics
905-565-1980

Standard Straight Electrodes

POINTED

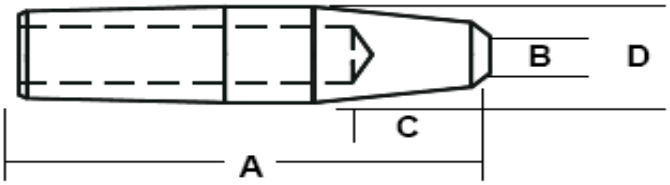

Example of Part Coding					
Rainbow			RWMA		
A	=	Pointed Nose	A	=	"A" Nose
2	=	#5 RW Taper	02	=	Class 2 Copper
250	=	2.50" Long	5	=	5 RW Taper
			10	=	Length in ¼"

TAPER	Class 2 Rainbow CODE	Class 2 RWMA CODE	Class 1 Rainbow CODE	Class 1 RWMA CODE	Class 3 Rainbow CODE	Class 3 RWMA CODE	Overall Length A	Weld Face Diam B	Face to Water Hole C	Major Diam D
4 RW OR #1 MT	A1-100	A-2404	A1-100-1	A-1404			1	3/16	1/2	.482 OR .500
	A1-125	A-2405	A1-125-1	A-1405	A1-125-2	A-3405	1-1/4			
	A1-150	A-2406	A1-150-1	A-1406	A1-150-2	A-3406	1-1/2			
	A1-175	A-2407	A1-175-1	A-1407	A1-175-2	A-3407	1-3/4			
	A1-200	A-2408	A1-200-1	A-1408	A1-200-2	A-3408	2			
	A1-225	A-2409	A1-225-1	A-1409	A1-225-2	A-3409	2-1/4			
	A1-250	A-2410	A1-250-1	A-1410	A1-250-2	A-3410	2-1/2			
	A1-275	A-2411	A1-275-1	A-1411	A1-275-2	A-3411	2-3/4			
	A1-300	A-2412	A1-300-1	A-1412	A1-300-2	A-3412	3			
	A1-325	A-2413	A1-325-1	A-1413	A1-325-2	A-3413	3-1/4			
	A1-350	A-2414	A1-350-1	A-1414	A1-350-2	A-3414	3-1/2			
	A1-375	A-2415	A1-375-1	A-1415	A1-375-2	A-3415	3-3/4			
	A1-400	A-2416	A1-400-1	A-1416	A1-400-2	A-3416	4			

TAPER	Rainbow CODE	RWMA CODE	Rainbow CODE	RWMA CODE	Rainbow CODE	RWMA CODE				
5 RW OR #2 MT	A2-100	A-2505	A2-100-1	A-1505	A2-100-1	A-1505	1-1/4	1/4	3/4	.625
	A2-125	A-2506	A2-125-1	A-1506	A2-125-1	A-1506	1-1/2			
	A2-150	A-2507	A2-150-1	A-1507	A2-150-1	A-1507	1-3/4			
	A2-175	A-2508	A2-175-1	A-1508	A2-175-1	A-1508	2			
	A2-200	A-2509	A2-200-1	A-1509	A2-200-1	A-1509	2-1/4			
	A2-225	A-2510	A2-225-1	A-1510	A2-225-1	A-1510	2-1/2			
	A2-250	A-2511	A2-250-1	A-1511	A2-250-1	A-1511	2-3/4			
	A2-275	A-2512	A2-275-1	A-1512	A2-275-1	A-1512	3			
	A2-300	A-2513	A2-300-1	A-1513	A2-300-1	A-1513	3-1/4			
	A2-325	A-2514	A2-325-1	A-1514	A2-325-1	A-1514	3-1/2			
	A2-350	A-2515	A2-350-1	A-1515	A2-350-1	A-1515	3-3/4			
	A2-375	A-2516	A2-375-1	A-1516	A2-375-1	A-1516	4			
6 RW	A6-200	A-2608	A6-200-1	A-1608	A6-200-2	A-3608	2	9/32	3/4	.750
	A6-250	A-2610	A6-250-1	A-1610	A6-250-2	A-3610	2-1/2			
	A6-300	A-2612	A6-300-1	A-1612	A6-300-2	A-3612	3			
7 RW OR #3 MT	A3-200	A-2708	A3-200-1	A-1708	A3-200-2	A-3708	2	5/16	3/4	.875
	A3-250	A-2710	A3-250-1	A-1710	A3-250-2	A-3710	2-1/2			
	A3-300	A-2712	A3-300-1	A-1712	A3-300-2	A-3712	3			
	A3-400	A-2716	A3-400-1	A-1716	A3-400-2	A-3716	4			

RAINBOW ELECTRONICS

Standard Straight Electrodes

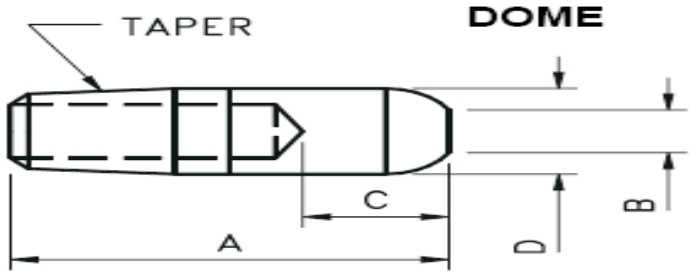

Example of Part Coding					
Rainbow			RWMA		
D	=	Dome Nose	B	=	"B" Nose
2	=	#5 RW Taper	02	=	Class 2 Copper
250	=	2.50" Long	5	=	5 RW Taper
			10	=	Length in ¼"

TAPER	Class 2 Rainbow CODE	Class 2 RWMA CODE	Class 1 Rainbow CODE	Class 1 RWMA CODE	Class 3 Rainbow CODE	Class 3 RWMA CODE	Overall Length A	Weld Face Diam B	Face to Water Hole C	Major Diam D
4 RW OR #1 MT	D1-100	B-2404	D1-100-1	B-1404			1	3/16	1/2	.482 OR .500
	D1-125	B-2405	D1-125-1	B-1405	D1-125-2	B-3405	1-1/4			
	D1-150	B-2406	D1-150-1	B-1406	D1-150-2	B-3406	1-1/2			
	D1-175	B-2407	D1-175-1	B-1407	D1-175-2	B-3407	1-3/4			
	D1-200	B-2408	D1-200-1	B-1408	D1-200-2	B-3408	2			
	D1-225	B-2409	D1-225-1	B-1409	D1-225-2	B-3409	2-1/4			
	D1-250	B-2410	D1-250-1	B-1410	D1-250-2	B-3410	2-1/2			
	D1-275	B-2411	D1-275-1	B-1411	D1-275-2	B-3411	2-3/4			
	D1-300	B-2412	D1-300-1	B-1412	D1-300-2	B-3412	3			
	D1-325	B-2413	D1-325-1	B-1413	D1-325-2	B-3413	3-1/4			
	D1-350	B-2414	D1-350-1	B-1414	D1-350-2	B-3414	3-1/2			
	D1-375	B-2415	D1-375-1	B-1415	D1-375-2	B-3415	3-3/4			
	D1-400	B-2416	D1-400-1	B-1416	D1-400-2	B-3416	4			

TAPER	Rainbow CODE	RWMA CODE	Rainbow CODE	RWMA CODE	Rainbow CODE	RWMA CODE				
5 RW OR #2 MT	D2-100	B-2505	D2-100-1	B-1505	D2-100-1	B-1505	1-1/4	1/4	3/4	.625
	D2-125	B-2506	D2-125-1	B-1506	D2-125-1	B-1506	1-1/2			
	D2-150	B-2507	D2-150-1	B-1507	D2-150-1	B-1507	1-3/4			
	D2-175	B-2508	D2-175-1	B-1508	D2-175-1	B-1508	2			
	D2-200	B-2509	D2-200-1	B-1509	D2-200-1	B-1509	2-1/4			
	D2-225	B-2510	D2-225-1	B-1510	D2-225-1	B-1510	2-1/2			
	D2-250	B-2511	D2-250-1	B-1511	D2-250-1	B-1511	2-3/4			
	D2-275	B-2512	D2-275-1	B-1512	D2-275-1	B-1512	3			
	D2-300	B-2513	D2-300-1	B-1513	D2-300-1	B-1513	3-1/4			
	D2-325	B-2514	D2-325-1	B-1514	D2-325-1	B-1514	3-1/2			
	D2-350	B-2515	D2-350-1	B-1515	D2-350-1	B-1515	3-3/4			
	D2-375	B-2516	D2-375-1	B-1516	D2-375-1	B-1516	4			
6 RW	D6-200	B-2608	D6-200-1	B-1608	D6-200-2	B-3608	2	9/32	3/4	.750
	D6-250	B-2610	D6-250-1	B-1610	D6-250-2	B-3610	2-1/2			
	D6-300	B-2612	D6-300-1	B-1612	D6-300-2	B-3612	3			
7 RW OR #3 MT	D3-200	B-2708	D3-200-1	B-1708	D3-200-2	B-3708	2	5/16	3/4	.875
	D3-250	B-2710	D3-250-1	B-1710	D3-250-2	B-3710	2-1/2			
	D3-300	B-2712	D3-300-1	B-1712	D3-300-2	B-3712	3			
	D3-400	B-2716	D3-400-1	B-1716	D3-400-2	B-3716	4			

Rainbow Electronics * Phone: 905-565-1980 * FAX: 905-565-1981 * E-MAIL: welding@ rainbow-electronics.com

Standard Straight Electrodes

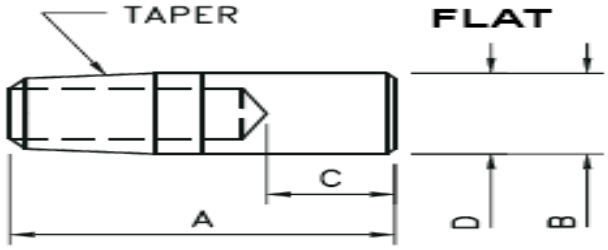

Example of Part Coding					
Rainbow			RWMA		
C	=	Flat Nose	C	=	"C" Nose
2	=	#5 RW Taper	02	=	Class 2 Copper
250	=	2.50" Long	5	=	5 RW Taper
			10	=	Length in ¼"

TAPER	Class 2 Rainbow CODE	Class 2 RWMA CODE	Class 1 Rainbow CODE	Class 1 RWMA CODE	Class 3 Rainbow CODE	Class 3 RWMA CODE	Overall Length A	Weld Face Diam B	Face to Water Hole C	Major Diam D
4 RW OR #1 MT	C1-100	C-2404	C1-100-1	C-1404			1	3/16	1/2	.482 OR .500
	C1-125	C-2405	C1-125-1	C-1405	C1-125-2	C-3405	1-1/4			
	C1-150	C-2406	C1-150-1	C-1406	C1-150-2	C-3406	1-1/2			
	C1-175	C-2407	C1-175-1	C-1407	C1-175-2	C-3407	1-3/4			
	C1-200	C-2408	C1-200-1	C-1408	C1-200-2	C-3408	2			
	C1-225	C-2409	C1-225-1	C-1409	C1-225-2	C-3409	2-1/4			
	C1-250	C-2410	C1-250-1	C-1410	C1-250-2	C-3410	2-1/2			
	C1-275	C-2411	C1-275-1	C-1411	C1-275-2	C-3411	2-3/4			
	C1-300	C-2412	C1-300-1	C-1412	C1-300-2	C-3412	3			
	C1-325	C-2413	C1-325-1	C-1413	C1-325-2	C-3413	3-1/4			
	C1-350	C-2414	C1-350-1	C-1414	C1-350-2	C-3414	3-1/2			
	C1-375	C-2415	C1-375-1	C-1415	C1-375-2	C-3415	3-3/4			
	C1-400	C-2416	C1-400-1	C-1416	C1-400-2	C-3416	4			

TAPER	Rainbow CODE	RWMA CODE	Rainbow CODE	RWMA CODE	Rainbow CODE	RWMA CODE				
5 RW OR #2 MT	C2-100	C-2505	C2-100-1	C-1505	C2-100-1	C-1505	1-1/4	1/4	3/4	.625
	C2-125	C-2506	C2-125-1	C-1506	C2-125-1	C-1506	1-1/2			
	C2-150	C-2507	C2-150-1	C-1507	C2-150-1	C-1507	1-3/4			
	C2-175	C-2508	C2-175-1	C-1508	C2-175-1	C-1508	2			
	C2-200	C-2509	C2-200-1	C-1509	C2-200-1	C-1509	2-1/4			
	C2-225	C-2510	C2-225-1	C-1510	C2-225-1	C-1510	2-1/2			
	C2-250	C-2511	C2-250-1	C-1511	C2-250-1	C-1511	2-3/4			
	C2-275	C-2512	C2-275-1	C-1512	C2-275-1	C-1512	3			
	C2-300	C-2513	C2-300-1	C-1513	C2-300-1	C-1513	3-1/4			
	C2-325	C-2514	C2-325-1	C-1514	C2-325-1	C-1514	3-1/2			
	C2-350	C-2515	C2-350-1	C-1515	C2-350-1	C-1515	3-3/4			
	C2-375	C-2516	C2-375-1	C-1516	C2-375-1	C-1516	4			
6 RW	C6-200	C-2608	C6-200-1	C-1608	C6-200-2	C-3608	2	9/32	3/4	.750
	C6-250	C-2610	C6-250-1	C-1610	C6-250-2	C-3610	2-1/2			
	C6-300	C-2612	C6-300-1	C-1612	C6-300-2	C-3612	3			
7 RW OR #3 MT	C3-200	C-2708	C3-200-1	C-1708	C3-200-2	C-3708	2	5/16	3/4	.875
	C3-250	C-2710	C3-250-1	C-1710	C3-250-2	C-3710	2-1/2			
	C3-300	C-2712	C3-300-1	C-1712	C3-300-2	C-3712	3			
	C3-400	C-2716	C3-400-1	C-1716	C3-400-2	C-3716	4			

Standard Straight Electrodes

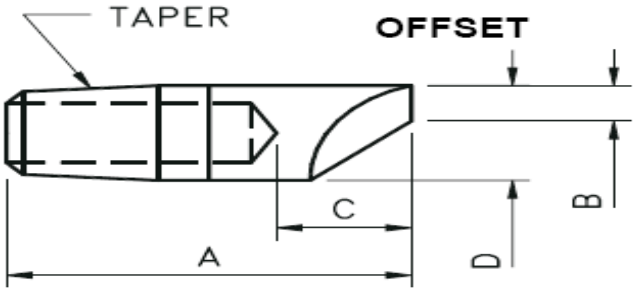

Example of Part Coding					
Rainbow			RWMA		
O	=	Offset Nose	D	=	"D" Nose
2	=	#5 RW Taper	02	=	Class 2 Copper
250	=	2.50" Long	5	=	5 RW Taper
			10	=	Length in ¼"

TAPER	Class 2 Rainbow CODE	Class 2 RWMA CODE	Class 1 Rainbow CODE	Class 1 RWMA CODE	Class 3 Rainbow CODE	Class 3 RWMA CODE	Overall Length A	Weld Face Diam B	Face to Water Hole C	Major Diam D
4 RW OR #1 MT	O1-100	D-2404	O1-100-1	D-1404			1	3/16	1/2	.482 OR .500
	O1-125	D-2405	O1-125-1	D-1405	O1-125-2	D-3405	1-1/4			
	O1-150	D-2406	O1-150-1	D-1406	O1-150-2	D-3406	1-1/2			
	O1-175	D-2407	O1-175-1	D-1407	O1-175-2	D-3407	1-3/4			
	O1-200	D-2408	O1-200-1	D-1408	O1-200-2	D-3408	2			
	O1-225	D-2409	O1-225-1	D-1409	O1-225-2	D-3409	2-1/4			
	O1-250	D-2410	O1-250-1	D-1410	O1-250-2	D-3410	2-1/2			
	O1-275	D-2411	O1-275-1	D-1411	O1-275-2	D-3411	2-3/4			
	O1-300	D-2412	O1-300-1	D-1412	O1-300-2	D-3412	3			
	O1-325	D-2413	O1-325-1	D-1413	O1-325-2	D-3413	3-1/4			
	O1-350	D-2414	O1-350-1	D-1414	O1-350-2	D-3414	3-1/2			
	O1-375	D-2415	O1-375-1	D-1415	O1-375-2	D-3415	3-3/4			
	O1-400	D-2416	O1-400-1	D-1416	O1-400-2	D-3416	4			

TAPER	Rainbow CODE	RWMA CODE	Rainbow CODE	RWMA CODE	Rainbow CODE	RWMA CODE				
5 RW OR #2 MT	O2-100	D-2505	O2-100-1	D-1505	O2-100-1	D-1505	1-1/4	1/4	3/4	.625
	O2-125	D-2506	O2-125-1	D-1506	O2-125-1	D-1506	1-1/2			
	O2-150	D-2507	O2-150-1	D-1507	O2-150-1	D-1507	1-3/4			
	O2-175	D-2508	O2-175-1	D-1508	O2-175-1	D-1508	2			
	O2-200	D-2509	O2-200-1	D-1509	O2-200-1	D-1509	2-1/4			
	O2-225	D-2510	O2-225-1	D-1510	O2-225-1	D-1510	2-1/2			
	O2-250	D-2511	O2-250-1	D-1511	O2-250-1	D-1511	2-3/4			
	O2-275	D-2512	O2-275-1	D-1512	O2-275-1	D-1512	3			
	O2-300	D-2513	O2-300-1	D-1513	O2-300-1	D-1513	3-1/4			
	O2-325	D-2514	O2-325-1	D-1514	O2-325-1	D-1514	3-1/2			
	O2-350	D-2515	O2-350-1	D-1515	O2-350-1	D-1515	3-3/4			
	O2-375	D-2516	O2-375-1	D-1516	O2-375-1	D-1516	4			
6 RW	O6-200	D-2608	O6-200-1	D-1608	O6-200-2	D-3608	2	9/32	3/4	.750
	O6-250	D-2610	O6-250-1	D-1610	O6-250-2	D-3610	2-1/2			
	O6-300	D-2612	O6-300-1	D-1612	O6-300-2	D-3612	3			
7 RW OR #3 MT	O3-200	D-2708	O3-200-1	D-1708	O3-200-2	D-3708	2	5/16	3/4	.875
	O3-250	D-2710	O3-250-1	D-1710	O3-250-2	D-3710	2-1/2			
	O3-300	D-2712	O3-300-1	D-1712	O3-300-2	D-3712	3			
	O3-400	D-2716	O3-400-1	D-1716	O3-400-2	D-3716	4			

Standard Straight Electrodes

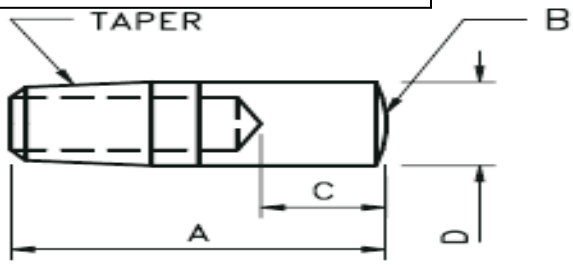

RADIUS

	Class 2	Class 1	Overall Length A	Weld Face Diam. B	Face to Water Hole C	Major Diam D
4RW / #1 MT	TR-244	TR-144	1	3/16	.500	.482 OR .500
	TR-246	TR-146	1-1/2			
	TR-248	TR-148	2			
	TR-2410	TR-1410	2-1/2			
	TR2412	TR-1412	3			
5RW / #2 MT	TR-256	TR-156	1-1/2	1/4	3/4	.625
	TR-258	TR-158	2			
	TR-2510	TR-1510	2-1/2			
	TR-2512	TR-1512	3			
	TR-2514	TR1514	3-1/2			
	TR-2516	TR-1516	4			
7RW / #3 MT	TR-278	TR-178	2	5/16	3/4	.875
	TR-2712	TR-1712	3			
	TR-2716	TR-1716	4			

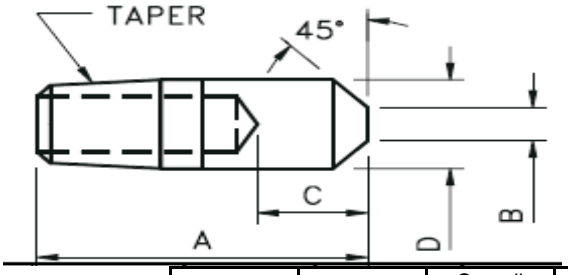

TRUNCATED

	Class 2	Class 1	Overall Length A	Weld Face Diam. B	Face to Water Hole C	Major Diam D
4RW / #1 MT	TC-244	TC-144	1	3/16	.500	.482 OR .500
	TC-246	TC-146	1-1/2			
	TC-248	TC-148	2			
	TC-2410	TC-1410	2-1/2			
	TC2412	TC-1412	3			
5RW / #2 MT	TC-256	TC-156	1-1/2	1/4	3/4	.625
	TC-258	TC-158	2			
	TC-2510	TC-1510	2-1/2			
	TC-2512	TC-1512	3			
	TC-2514	TC1514	3-1/2			
	TC-2516	TC-1516	4			
7RW / #3 MT	TC-278	TC-178	2	5/16	3/4	.875
	TC-2712	TC-1712	3			
	TC-2716	TC-1716	4			

Rainbow Electronics * Phone: 905-565-1980 * FAX: 905-565-1981 * E-MAIL: welding@ rainbow-electronics.com

Copper Tungsten Faced & Offset Electrodes

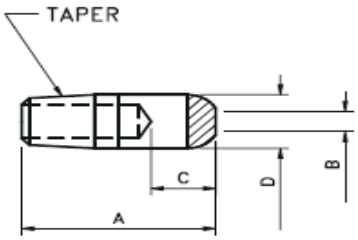

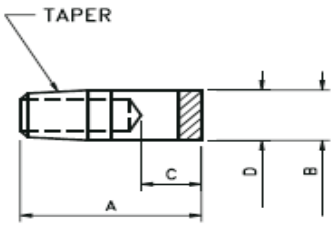

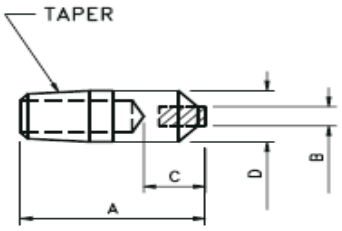

Taper	Copper Tungsten Facing	Tungsten Facing	Molly Facing	Overall Length A	Weld Face Diam B	Face to Water Hole C	Major Diam D
DOME - CT FACED							
4RW / #1 MT	CT-1578	CT-1577	M-1579	2	1/8	3/8	.500
5RW / #2 MT	CT-1581	CT-1580	M-1582		1/8		.625
7RW / #3 MT	CT-1584	CT-1583	M-1585		1/4		.875
FLAT - CT FACED							
4RW / #1 MT	CT-1587	CT-1586	M-1588	2	1/2	3/8	.500
5RW / #2 MT	CT-1590	CT-1589	M-1591		5/8		.625
7RW / #3 MT	CT-1593	CT-1592	M-1594		7/8		.875
CENTRE INSERTED							
4RW / #1 MT	H-147400	CT-147400	M-147400	2	3/16	1/2	.500
5RW / #2 MT	H-147500	CT-147500	M-147500		1/4	9/16	.625
7RW / #3 MT	H-147600	CT-147600	M-147600		3/	11/16	.875

Copper Tungsten, Tungsten and Molybdenum are also available in Cut-To-Length Inserts, in 8” or 12” Lengths and in Round or Rectangular Shapes

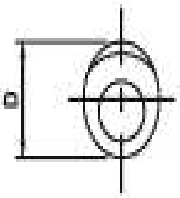

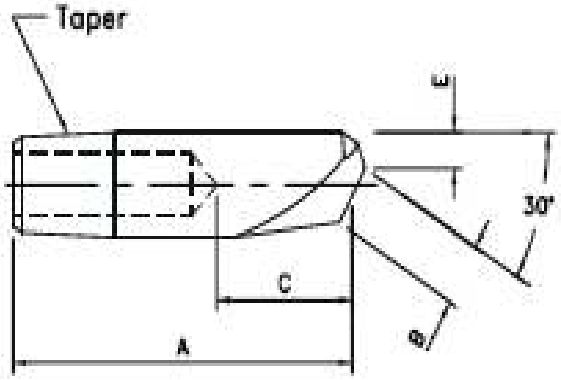

30 Degree Offset						
Taper	Part #	Length to Centre of Face	Weld Face Diam A	Face to Water Hole B	Major Diam C	Clearance Distance E
4RW / #1 MT	SP-219-1	2	1/4	2-1/2	.482/.500	3/16
5RW / #2 MT	SP-219-2	2-1/2	3/8		.625	1/4
7RW / #3 MT	SP-219-3	3	1/2		.875	5/16

Rainbow Electronics * Phone: 905-565-1980 * FAX: 905-565-1981 * E-MAIL: welding@ rainbow-electronics.com

Male Cap Tips

"A" POINTED

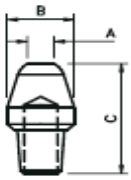

"B" DOME

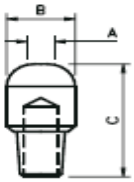

"C" FLAT

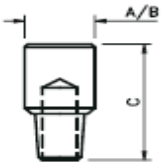

"D" OFFSET

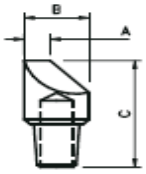

Taper	Class 1	Class 2	Zr/Cu.	Class 3	Weld Face Diam A	Major Diam B	Overall Length C
"A" Nose - Pointed							
4 RW	CA-14	CA-24	CA-Z4	CA-34	3/16	1/2	1-1/8
5 RW	CA-15	CA-25	CA-Z5	CA-35	1/4	5/8	1-1/4
7 RW		CA-27			5/16	7/8	1-5/8
"B" Nose - Dome							
4 RW	CB-14	CB-24	CB-Z4	CB-34	3/16	1/2	1-1/8
5 RW	CB-15	CB-25	CB-Z5	CB-35	1/4	5/8	1-1/4
7 RW		CB-27			5/16	7/8	1-5/8
"C" Nose - Flat							
4 RW	CC-14	CC-24	CC-Z4	CC-34	3/16	1/2	1-1/8
5 RW	CC-15	CC-25	CC-Z5	CC-35	1/4	5/8	1-1/4
7 RW		CC-27			5/16	7/8	1-5/8
"D" Nose - Offset							
4 RW	CD-14	CD-24	CD-Z4	CD-34	3/16	1/2	1-1/8
5 RW	CD-15	CD-25	CD-Z5	CD-35	1/4	5/8	1-1/4
7 RW		CD-27			5/16	7/8	1-5/8

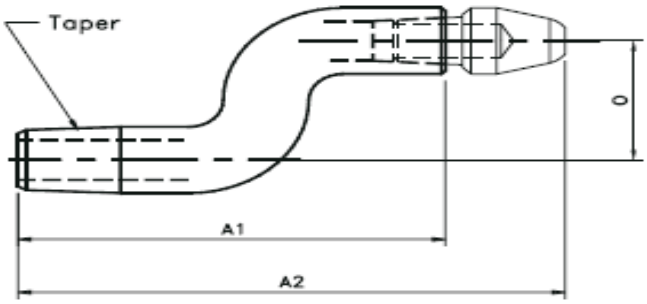

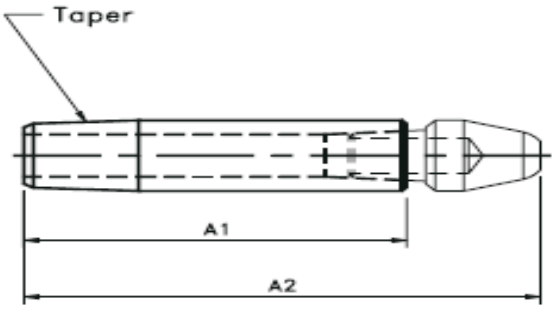

Offset Male Cap Shanks

5RW Taper Part #	Shank Length A1	Ass'y Length A2	Tip Offset O
OSM-2528-4	2-1/2	3-1/4	1/4
OSM-2528-8	2-1/2	3-1/4	1/2
OSM-2534-16	3-1/4	4	1
OSM-25212-20	2-3/4	3-1/2	1-1/4
OSM-25312-24	3-3/4	4-1/2	1-1/2
OSM-25212-28	2-3/4	3-1/2	1-3/4
OSM-25314-40	3-7/8	4-5/8	2-1/2
OSM-2534-32	3-1/4	4	2

Straight Male Cap Shanks

4RW Taper	5RW Taper	Shank Length A1	Ass'y Length A2
CSM-245	CSM-255	1-1/4	2
CSM-246	CSM-256	1-1/2	2-1/4
CSM-247	CSM-257	1-3/4	2-1/2
CSM-248	CSM-258	2	2-3/4
CSM-249	CSM-259	2-1/4	3
CSM-2410	CSM-2510	2-1/2	3-1/4
CSM-2411	CSM-2511	2-3/4	3-1/2
CSM-2412	CSM-2512	3	3-3/4
CSM-2413	CSM-2513	3-1/4	4

Female Cap Tips

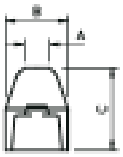

CAF (POINTED)

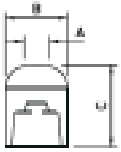

CBF (DOME)

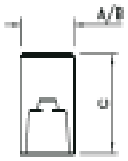

CCF (FLAT)

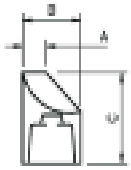

CDF (OFFSET)

Taper	Class 2	Zr/Cu.	Glidcop	Weld Face Diam A	Major Diam B	Overall Length C
"A" Nose - Pointed						
4 RW	CAF-24	CAF-Z4	CAF-G4	3/16	1/2	0.84
5 RW	CAF-25	CAF-Z5	CAF-G5	1/4	5/8	0.88
6 RW	CAF-26	CAF-Z6	CAF-G6	9/32	3/4	1
"B" Nose - Dome						
4 RW	CBF-24	CBF-Z4	CBF-G4	3/16	1/2	0.84
5 RW	CBF-25	CBF-Z5	CBF-G5	1/4	5/8	0.88
6 RW	CBF-26	CBF-Z6	CBF-G6	9/32	3/4	1
"C" Nose - Flat						
4 RW	CCF-24	CCF-Z4	CCF-G4	3/16	1/2	0.84
5 RW	CCF-25	CCF-Z5	CCF-G5	1/4	5/8	0.88
6 RW	CCF-26	CCF-Z6	CCF-G6	9/32	3/4	1
"D" Nose - Offset						
4 RW	CDF-24	CDF-Z4	CDF-G4	3/16	1/2	0.84
5 RW	CDF-25	CDF-Z5	CDF-G5	1/4	5/8	0.88
6 RW				9/32	3/4	1

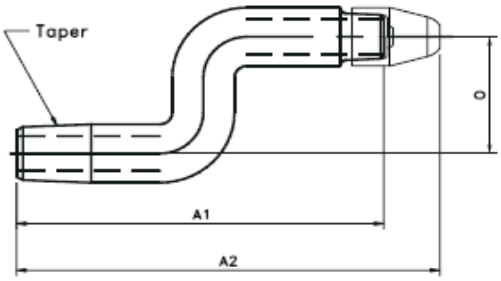

OFFSET FEMALE CAP SHANKS

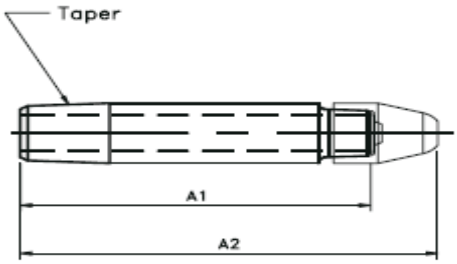

STRAIGHT FEMALE CAP SHANKS

5RW Taper Part #	Shank Length A1	Ass'y Length A2	Tip Offset O
OSF-2511-8	2-3/4	3-1/4	1/2
OSF-2511-12	2-3/4	3-1/4	3/4
OSF-2511-16	2-3/4	3-1/4	1
OSF-2513-8	3-1/4	3-3/4	1/2
OSF-2514-16	3-1/2	4	1
OSF-2515-20	3-3/4	4-1/4	1-1/4

4RW Taper	5RW Taper	Shank Length A1	Ass'y Length A2
CSF-246	CSF-256	1-1/2	2
CSF-248	CSF-258	2	2-1/2
CSF-2410	CSF-2510	2-1/2	3
CSF-2412	CSF-2512	3	3-1/2
CSF-2414	CSF-2514	3-1/2	4
CSF-2416	CSF-2516	4	4-1/2

Single Bend Tips

*Water Cooling reaches the nose of the tip, increasing life over traditional cast or forged offset tips.
*Water tubes are supplied on all double bend tips and on severe single bend tips. Tips can be supplied without water tubes on request.

NOTE: *Quantity shipped on specials may run +/- 10% of order quantity. (2 pieces on runs under 25)
*Six piece minimum order on special bends

SINGLE BEND TIP CODING

S = Single Bend Tip
16 = Nose Length in 1/16" Increments
P = Pointed Nose D = Dome Nose F = Flat Nose O = Offset Nose R = Radius Nose*
1 = Alloy Specification (RWMA Class 1) 2 = Alloy Specification (RWMA Class 2) 3 = Alloy Specification (RWMA Class 3)
4 = Taper Specification (#4 RW Taper) 5 = Taper Specification (#5 RW Taper) 6 = Taper Specification (#6 RW Taper) 7 = Taper Specification (#7 RW Taper)
2 = Length in 1 Inch Increments
14 = Fractional Length in 1/16" Increments
8 = Offset in 1/16" Increments
Example: S16-P14214-8 *Note: Please specify Radius

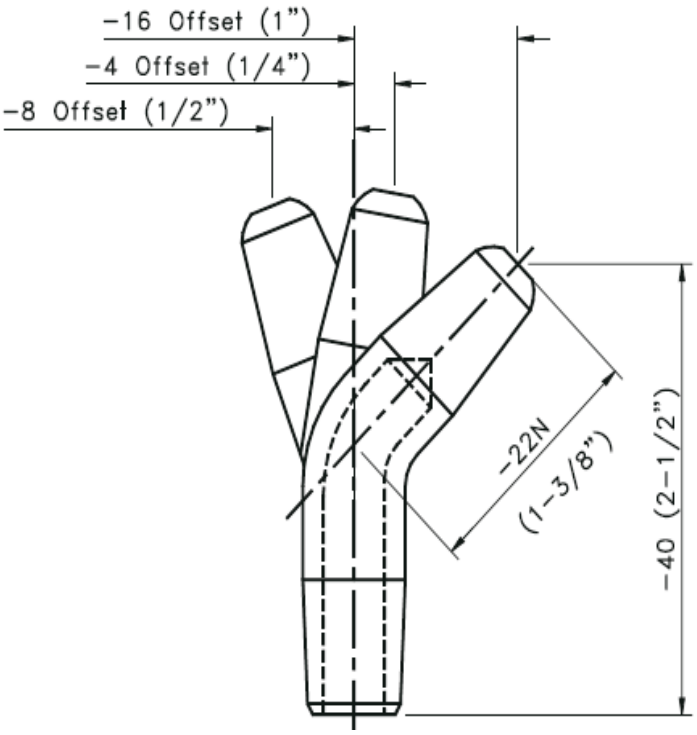

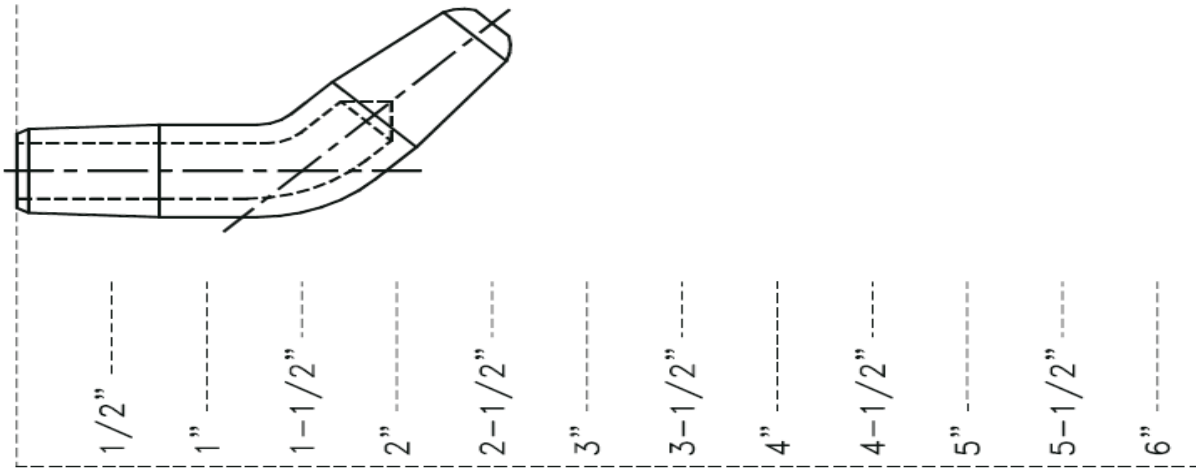

Double Bend Tips

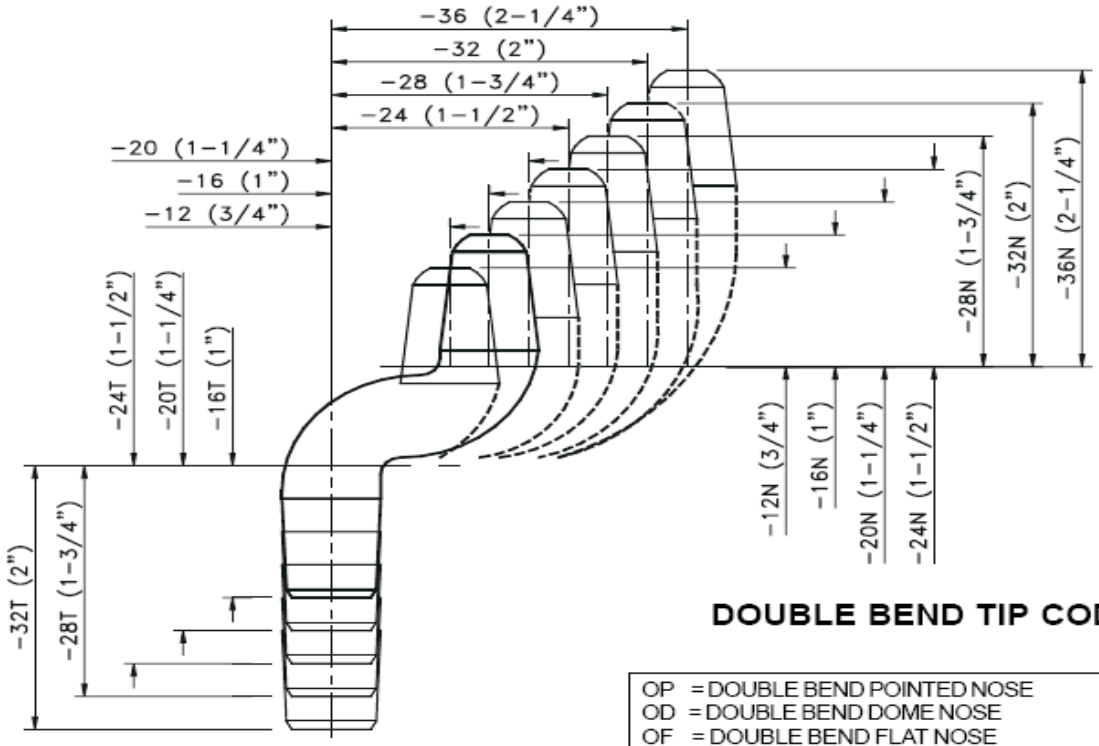

DOUBLE BEND TIP CODING

OP	= DOUBLE BEND POINTED NOSE
OD	= DOUBLE BEND DOME NOSE
OF	= DOUBLE BEND FLAT NOSE
OO	= DOUBLE BEND OFFSET NOSE
OR	= DOUBLE BEND RADIUS NOSE (SPECIFY RADIUS*)
1	= ALLOY SPECIFICATION (1 =RWMA CLASS 1)
2	= ALLOY SPECIFICATION (2 =RWMA CLASS 2)
3	= ALLOY SPECIFICATION (3 =RWMA CLASS 3)
4	= TAPER SPECIFICATION (4 =#4 RW TAPER)
5	= TAPER SPECIFICATION (5 = #5 RW TAPER)
6	= TAPER SPECIFICATION (6 = #6 RW TAPER)
7	= TAPER SPECIFICATION (7 = #7 RW TAPER)
3	= LENGTH IN 1 INCH INCREMENTS
14	= FRACTIONAL LENGTH IN 1/16" INCREMENTS
16	= OFFSET IN 1/16" INCREMENTS
20N	= NOSE LENGTH IN 1/16" INCREMENTS
24T	= TAPER LENGTH IN 1/16" INCREMENTS

EXAMPLE: OP-14314-16-20N-24T

* FOR RADIUS NOSE, ADD THE REQUIRED RADIUS TO THE END OF THE PART NUMBER. (3 = 3" SPHERICAL RADIUS)

Minimum Overall Length = Nose Length + Taper Length + Body Diameter.
Maximum Offset = 2-1/2"

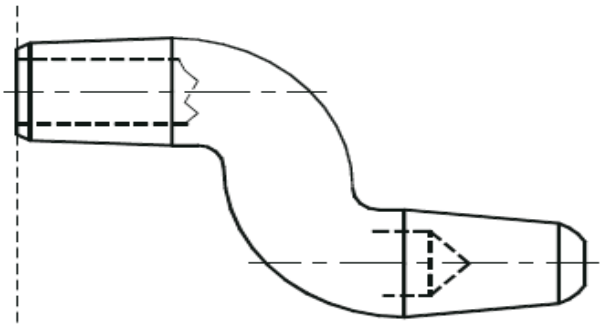

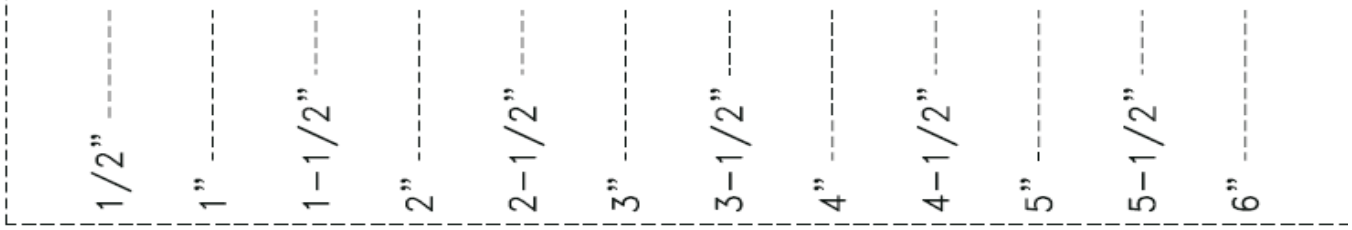

CAST IRREGULAR OFFSET TIPS

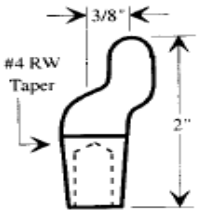

OF1-375

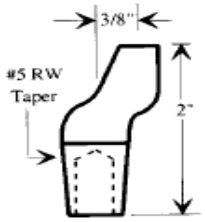

OF2-375

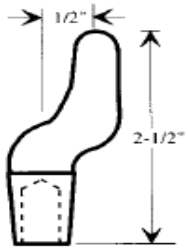

OF1-500S / OF2-500S
#4 RW / #5 RW

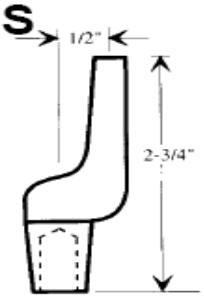

OF1-500 / OF2-500
#4 RW / #5 RW

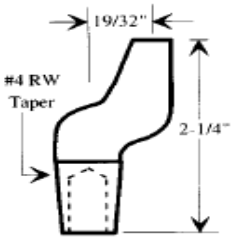

OF1-1932

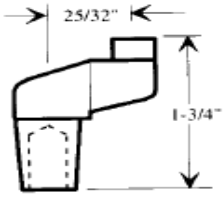

OF1-2532 / OF2-2532
#4 RW / #5 RW

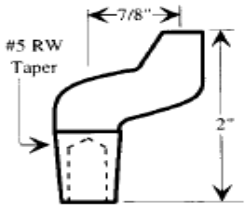

OF2-875

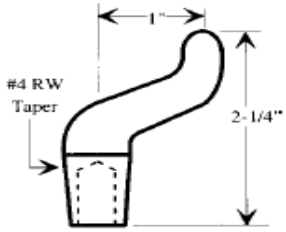

OF1-1000S

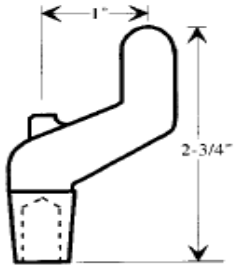

OF1-1000 / OF2-1000
#4 RW / #5 RW

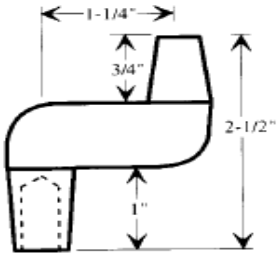

OF1-1250 / OF2-1250
#4 RW / #5 RW
(FORGED)

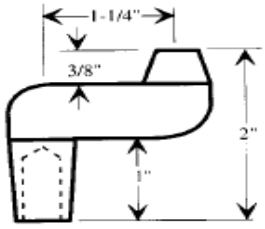

OF1-1250S / OF2-1250S
#4 RW / #5 RW
(FORGED)

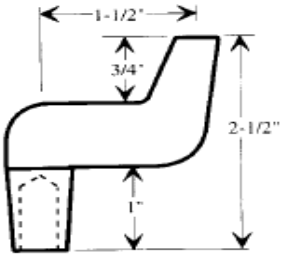

OF1-1500 / OF2-1500
#4 RW / #5 RW
(FORGED)

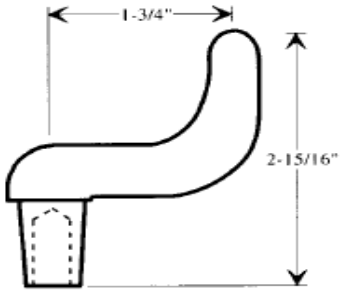

OF1-1750 / OF2-1750
(RW-985 / RW-959)
#4 RW / #5 RW

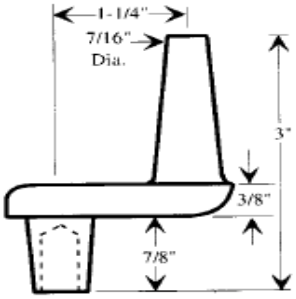

RW-969 / RW-1284
#4 RW / #5 RW

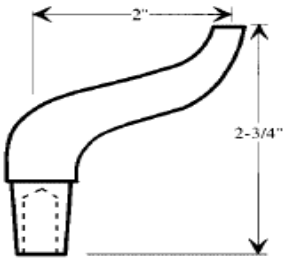

OF1-2000 / OF2-2000
(RW-1995 / RW-88)
#4 RW / #5 RW

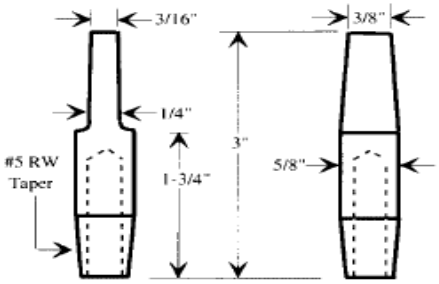

RW-990

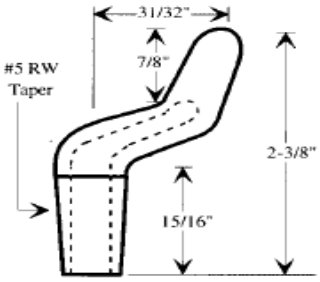

RW-1190
Cold Formed Tip

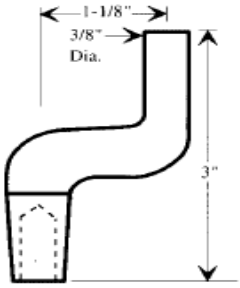

SPB-553-1 / SPB-553-2
(RW-1137 / RW-1138)
#4 RW / #5 RW
Cold Formed

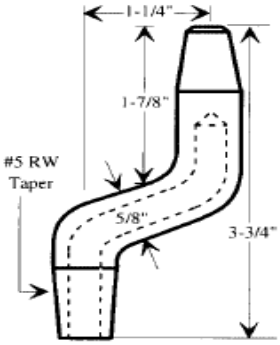

OF2-1250 3.75
Cold Formed
OP-25312-20-30N-16T

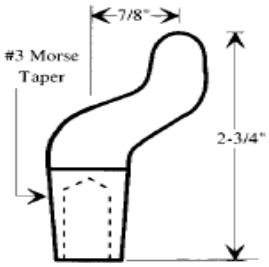

OF3-875

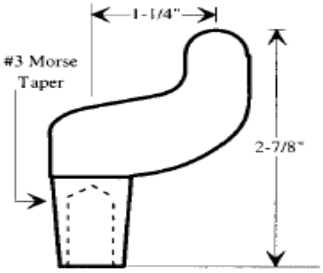

OF3-1250

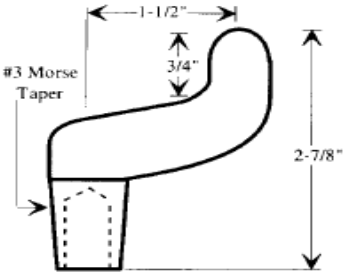

OF3-1500

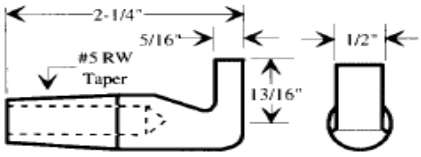

RW-1178

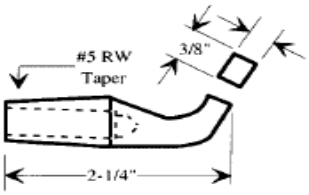

A2-200

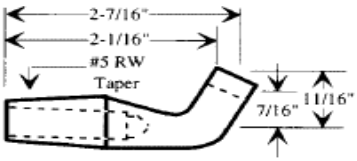

A2-205

Rectangular & Square Faced Electrodes

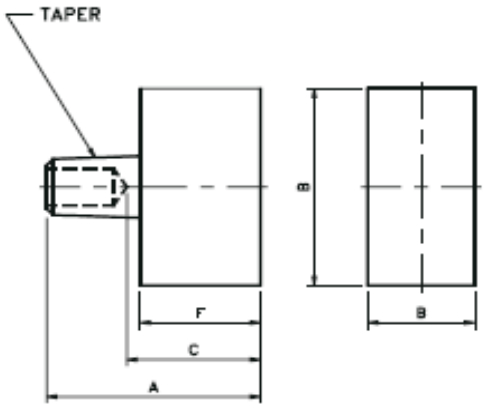

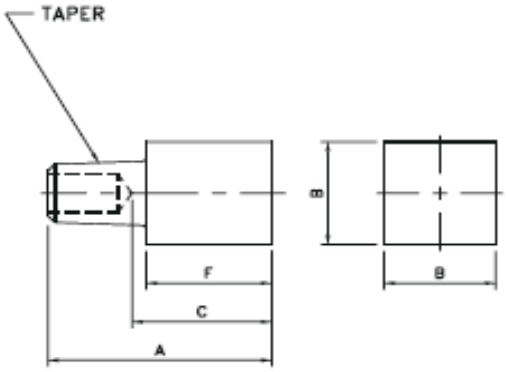

Example of Part Coding		
TS	=	Square / Rectangular Face
2	=	RWMA Class 2 Copper
5	=	#5 RW Taper
24	=	Length in 1/16” (24 = 1-1/2”)
10x16	=	Width x Length of Face in 1/16” (10 x 16 = 5/8” x 1”)
18	=	Water Hole Depth (If different than Std. 7/8”)
CT	=	Copper Tungsten Facing

Taper	Class 2	Overall Length A	Weld Face Dimension B	Face to Water Hole C	Length of Face F
4 RW #1 MT	TS-24-25-10X32	1-9/16	5/8 X 2	13/16	1
	TS-24-26-8X16	1-5/8	1/2 X 1	1/2	7/8
	TS-24-24-8X8	1-1/2	1/2 X 1/2		
	TS-24-24-8X16	1-1/2	1/2 X 1		
	TS-24-35-4X16	2-3/16	1/4 X 1	1-5/16	
5 RW #2 MT	TS-25-25-10X32	1-9/16	5/8 X 2	13/16	11/16
	TS-25-29-10X16	1-13/16	5/8 X 1	11/16	15/16
	TS-25-24-10X16	1-1/2	5/8 X 1	1/2	5/8
	TS-25-28-10X10	1-3/4	5/8 X 5/8	3/4	7/8
	TS-25-35-4X16	2-3/16	1/4 X 1	1-5/16	1

* Additional Rectangular or Square face sizes and lengths available

Round Faced Electrodes

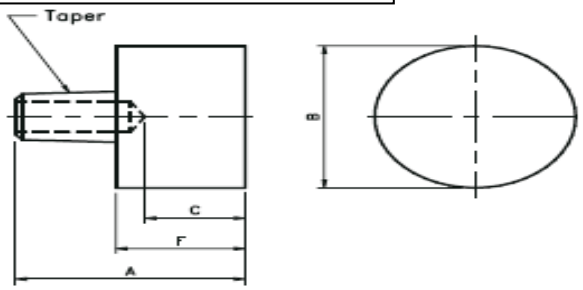

Example of Part Coding		
TR	=	Round Face
2	=	RWMA Class 2 Copper
5	=	#5 RW Taper
24	=	Length in 1/16" (24 = 1-1/2")
14	=	Weld Face Diameter in 1/16"
16	=	Water Hole Depth in 1/16" (If different than Std. 7/8")
CT	=	Copper Tungsten Facing

Taper	Class 2	Overall Length A	Weld Face Dimension B	Face to Water Hole C	Length of Face F
4 RW #1 MT	TR-24-24-14	1-1/2	7/8	5/8	7/8
	TR-24-20-16-13	1-1/4	1	7/16	5/8
	TR-24-20-12-16	1-1/4	3/4	1/4	5/8
	TR-24-20-20-16	1-1/4	1-1/4	1/4	5/8
	TR-24-32-14-20	2	7/8	3/4	1-3/8
5 RW #2 MT	TR-25-24-14-14	1-1/2	7/8	5/8	5/8
	TR-25-24-16-18	1-1/2	1	3/8	1
	TR-25-30-14-14	1-7/8	7/8	1	1
	TR-25-24-14-18	1-1/2	7/8	3/8	5/8
	TR-25-24-12-18	1-1/2	3/4	3/8	5/8
	TR-25-24-20-18	1-1/2	1-1/4	3/8	5/8
	TR-25-46-12-14	2-7/8	3/4	2	2
	TR-25-46-16-14	2-7/8	1	2	2
	TR-25-32-16-20	2	1	3/4	1-1/8
	TR-25-32-24-16	2	1-1/2	1	1-1/8

Swivel Tip Electrodes

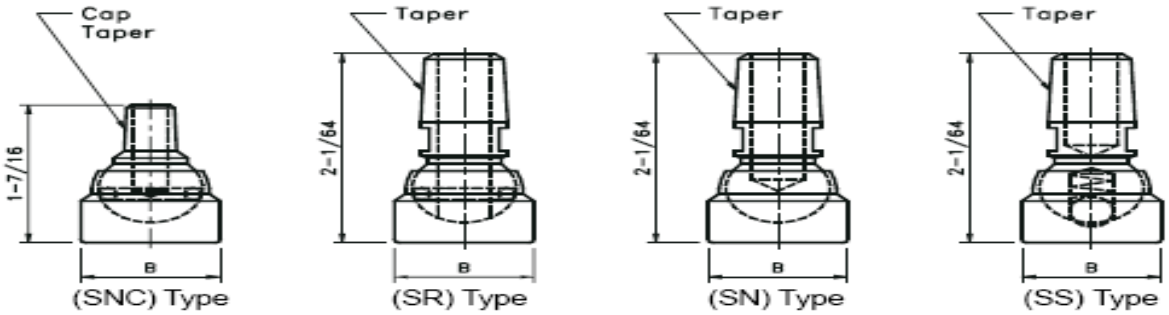

TAPER	5 RW MALE CAP TAPER PART #	SPRING BALL TYPE PART #	BLIND HOLE TYPE PART #	O RING TYPE PART #	WELD FACE DIAMETER B
4 RW #1 MT		SS-147	SN-147	SR-147	7/8
		SS-148	SN-148	SR-148	1
		SS-1410	SN-1410	SR-1410	1-1/4
		SS-1412	SN-1412	SR-1412	1-1/2
5 RW #2 MT	SNC-157	SS-157	SN-157	SR-157	7/8
	SNC-158	SS-158	SN-158	SR-158	1
	SNC-1510	SS-1510	SN-1510	SR-1510	1-1/4
		SS-1512	SN-1512	SR-1512	1-1/2

Stud & Nut Electrodes

T-600 SERIES

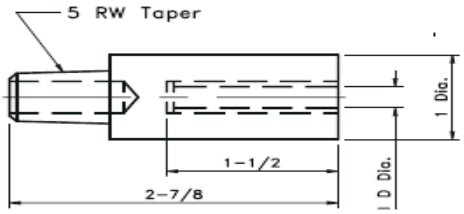

T-600-CT SERIES

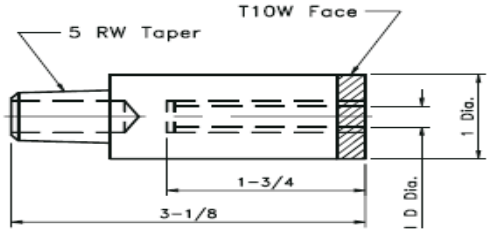

T-610 SERIES

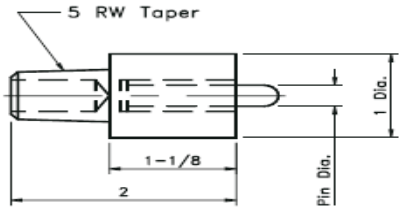

T-610-CT SERIES

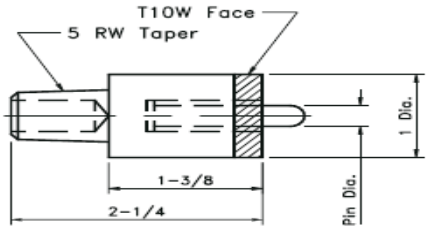

STUD ELECTRODES - 5 RW				
PART #	PART # WITH T-10W FACE	PART # ALLOY #200	STUD SIZE	DIAMETER
T-601	T-601-CT	T-701	#8	.164
T-602	T-602-CT	T-702	#10	.190
T-603	T-603-CT	T-703	#12	.216
T-604	T-604-CT	T-704	1/4	.250
T-605	T-605-CT	T-705	5/16	.312
T-606	T-606-CT	T-706	3/8	.164
T-607	T-607-CT	T-707	7/16	.164

METRIC STUD ELECTRODES - 5 RW				
PART #	PART # WITH T-10W FACE	PART # ALLOY #200	STUD SIZE	DIAMETER
T-606MM	T-606MM-CT	T-706MM	6MM	.236
T-608MM	T-608MM-CT	T-708MM	8MM	.316
T-6010MM	T-6010MM-CT	T-7010MM	10MM	.394

SELF PILOTING NUT ELECTRODES - 5 RW					
PART #	PART # WITH T-10W FACE	PART # ALLOY #200	NUT SIZE	PIN DIAM.	PILOT PIN HEIGHT
T-611	T-611-CT	T-711	#8-32	.126	3/16
T-612	T-612-CT	T-712	#10-24	.144	3/16
T-613	T-613-CT	T-713	#12-24	.170	1/4
T-614	T-614-CT	T-714	1/4-20	.187	5/16
T-615	T-615-CT	T-715	5/16-18	.250	5/16
T-616	T-616-CT	T-716	3/8-16	.312	3/8
T-617	T-617-CT	T-717	7/16-14	.355	3/8
T-618	T-618-CT	T-718	1/2-13	.414	3/8

UPPER ELECTRODE - CT FACED

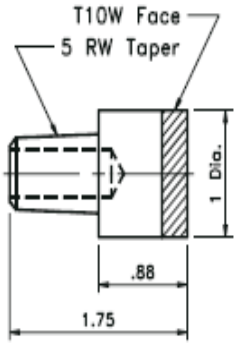

TR-25-28-16-18-CT

Stepped pins are also available, please supply us with a print, sample or consult factory.

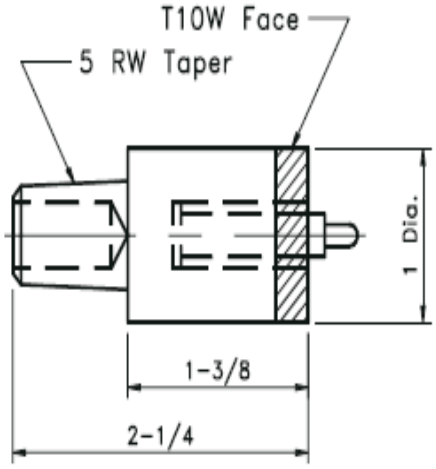

Stud & Nut Electrodes

STUD ELECTRODES - SPECIAL 7 RW			
PART #	PART # WITH T-10W FACE	STUD SIZE	DIAMETER
T-201	T-201-CT	#8	.164
T-202	T-202-CT	#10	.190
T-203	T-203-CT	#12	.216
T-204	T-204-CT	1/4	.250
T-205	T-205-CT	5/16	.312
T-206	T-206-CT	3/8	.164
T-207	T-207-CT	7/16	.164

SELF PILOTING NUT ELECTRODES - SPECIAL 7 RW				
PART #	PART # WITH T-10W FACE	NUT SIZE	PIN DIAM.	PILOT PIN HEIGHT
T-210	T-210-CT	#8-32	.126	3/16
T-212	T-212-CT	#10-24	.144	3/16
T-213	T-213-CT	#12-24	.170	1/4
T-214	T-214-CT	1/4-20	.187	5/16
T-215	T-215-CT	5/16-18	.250	5/16
T-216	T-216-CT	3/8-16	.312	3/8
T-217	T-217-CT	7/16-14	.355	3/8
T-218	T-218-CT	1/2-13	.414	3/8

STUD ELECTRODES - 5 RW			
PART #	PART # WITH T-10W FACE	STUD SIZE	DIAMETER
T-501	T-501-CT	#8	.164
T-502	T-502-CT	#10	.190
T-503	T-503-CT	#12	.216
T-504	T-504-CT	1/4	.250

SELF PILOTING NUT ELECTRODES - 5 RW				
PART #	PART # WITH T-10W FACE	NUT SIZE	PIN DIAM.	PILOT PIN HEIGHT
T-511	T-511-CT	#8-32	.126	3/16
T-512	T-512-CT	#10-24	.144	3/16
T-513	T-513-CT	#12-24	.170	1/4

T-200 SERIES

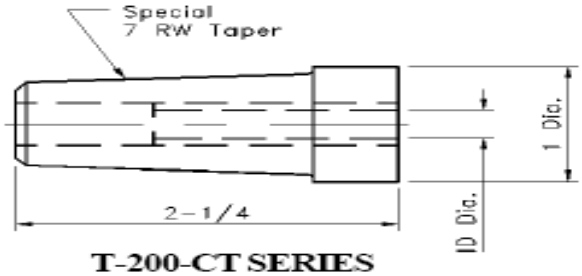

T-200-CT SERIES

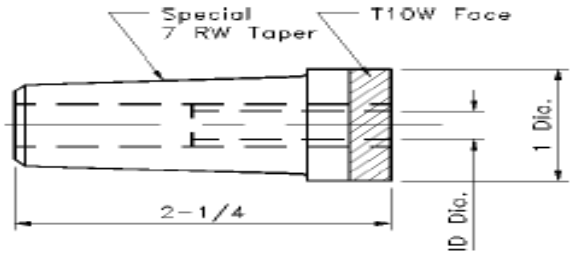

T-210 SERIES

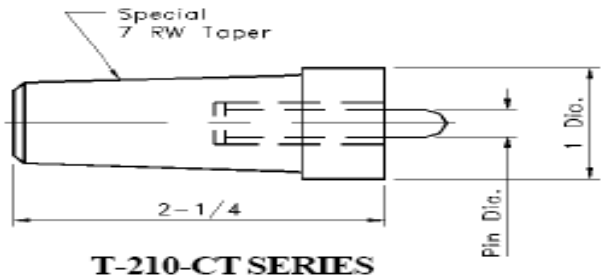

T-210-CT SERIES

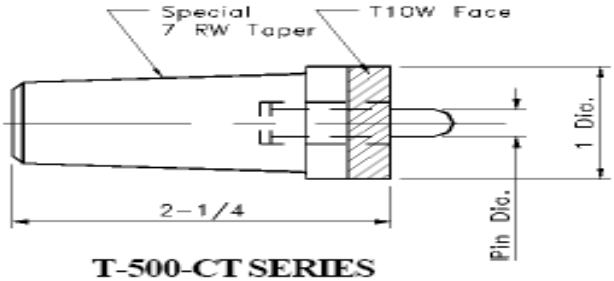

T-500-CT SERIES

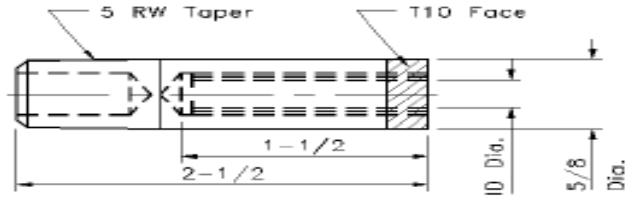

T-510-CT SERIES

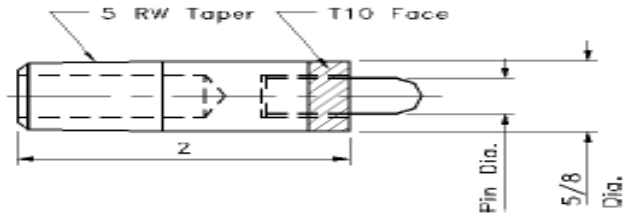

Air Pressure Nut Electrodes

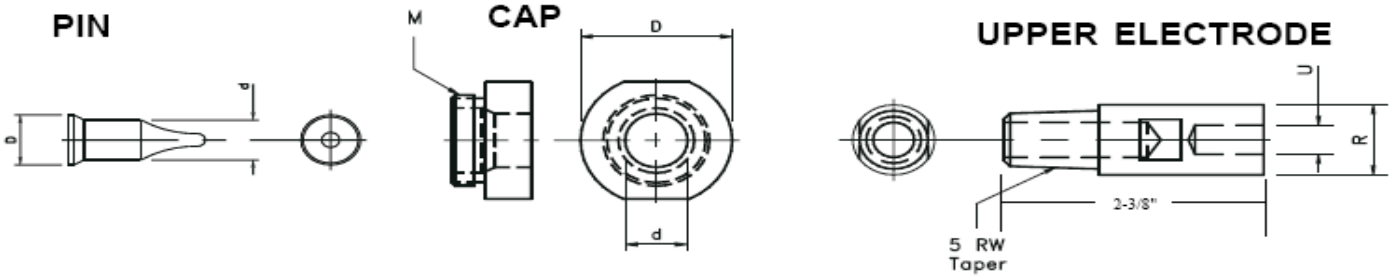

PIN NUMBER	d	D
TDP-M04	5	12
TDP-M05	6	12
TDP-M06	7	12
TDP-M07	8	12
TDP-M08	9	12
TDP-M09	10	12
TDP-M10	11	16
TDP-M11	12	16
TDP-M12	13	16
TDP-M13	14	16

CAP NUMBER	D	d	M
TCN-M04	25	5	18
TCN-M05	25	6	18
TCN-M06	25	7	18
TCN-M07	25	8	18
TCN-M08	25	9	18
TCN-M09	25	10	18
TCN-M10	32	11	22
TCN-M11	32	12	22
TCN-M12	32	13	22
TCN-M13	32	14	22

NOTE: For solid copper tungsten heads please add a "-CT" to the end of the part number.

UPPER ELECTRODE	NUT SIZE	R	U
TNFD-16-M5-16-3	M 4-6	16MM	5MM
TNFD-16-M5-16-3	M 4-6	16MM	5MM
TNFD-20-M6-16-3	M 6-7	20MM	6MM
TNFD-20-M6-16-3	M 6-7	20MM	6MM
TNFD-20-M8-16-3	M 8-9	20MM	7.5MM
TNFD-20-M8-16-3	M 8-9	20MM	7.5MM
TNFD-20-M10-16-3	M 10-11	20MM	10MM
TNFD-20-M10-16-3	M 10-11	20MM	10MM
TNFD-20-M12-16-3	M 12-13	20MM	12MM
TNFD-20-M12-16-3	M 12-13	20MM	12MM

NOTE: For copper tungsten faced electrodes please add a "-CT" to the end of the part number.

BODY NUMBER	D	TAPER / THREAD	CAP THREAD
TDH-25-A	25	MT #1	18MM
TDH-25-B	25	1/10	18MM
TDH-25-C	25	MT #2	18MM
TDH-25-D	25	1/10	18MM
TDH-25-E	25	1/5	18MM
TDH-30-A	32	MT #2	22MM
TDH-30-B	32	1/10	22MM
TDT-25-C	25	5/8-11	18MM
TDT-30-C	32	5/8-11	22MM
TDT-25-C-CL	25	5/8-11	5/8-18
TDT-30-A-CL	32	5/8-11	7/8-14

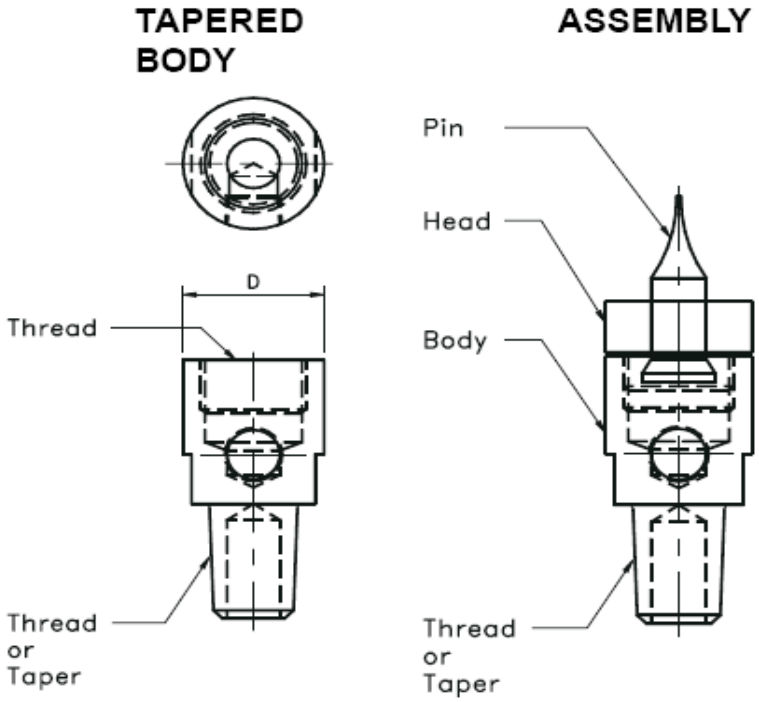

Specials available upon request.

TCL Heads & Components

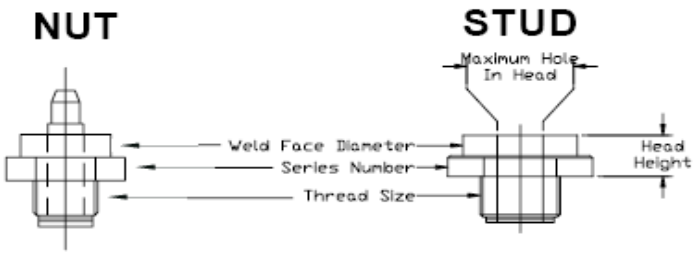

SERIES	THREAD SIZE	WELD FACE DIA.	HEAD HEIGHT	MAX. HOLE DIA.
TCL-201	5/8-18"	7/8"	1/2"	.427 (10.85) ID
TCL-301	7/8-14"	1-1/4"	1/2"	.642 (16.31) ID
TCL-401	1-1/8-12"	1-1/2"	5/8"	.852 (21.64) ID
*specials available in round stock or hex stock				

WELD NUT PIN NOSE STYLES

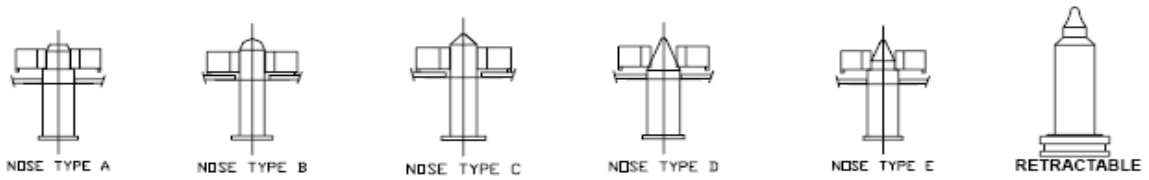

STANDARD BODY & MOUNTING STYLES

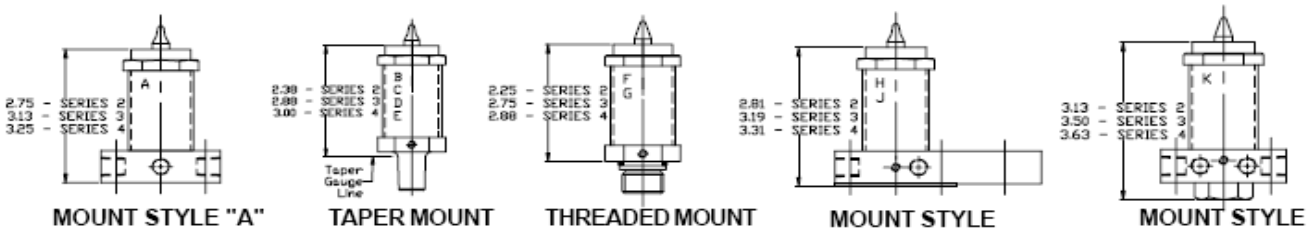

MOUNT STYLE "A" | TAPER MOUNT | THREADED MOUNT 1"-12 | MOUNT STYLE H & J | MOUNT STYLE K

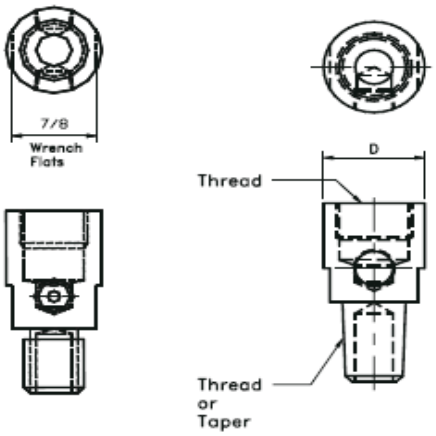

INFORMATION REQUIED TO ORDER "TCL" PARTS			
	TCL HEAD	TCL PIN	STUD
Nut type (piloted, Non-oiloted, ect)		X	
Nut style(sq., hex, round)		X	
Head Series		X	X
Hole in stamping	X	X	
Hole in nut	X	X	X
Stamping thickness	X	X	
Hand load		X	
Auto load		X	
Air / Spring operated		X	
Retractable (Air only)		X	
Length of stud	X		X
Head dia. Of stud	X		X
Stud dia	X		X

Tip Adapters

EXAMPLE OF PART CODING:		
AT	=	TAPER
H	=	HEX STOCK
R	=	ROUND STOCK
2	=	CLASS 2 COPPER
4	=	# 4 RW FEMALE TAPER
5	=	# 5 RW MALE TAPER
8	=	LENGTH IN 1/8" INCREMENTS

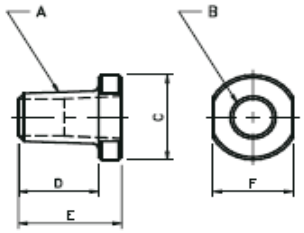

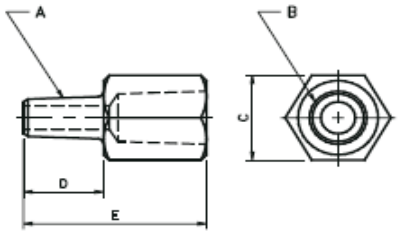

FEMALE TAPER TO MALE TAPER						
#130 Code No.	Male Taper A	Female Taper B	Stock Size C	Length Under Head D	Overall Length E	Wrench Flats F
AT-R245-9	5 RW	4 RW	1	7/8	1-1/8	7/8
AT-R247-12	7 RW		1-1/8	1-1/4	1-1/2	1
AT-R257-12		5 RW				

#130 Code No.	Male Taper A	Female Taper B	Stock Size C	Length Under Head D	Overall Length E
AT-H254-15	4 RW	5 RW	1	7/8	1-7/8

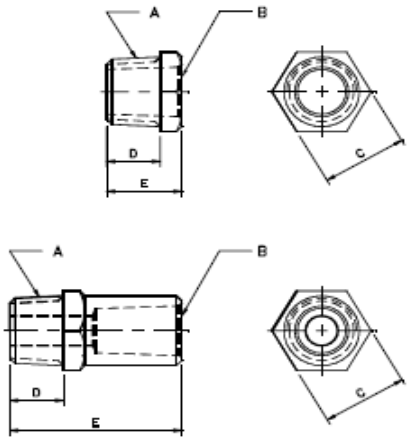

FEMALE TAPER TO MALE STRAIGHT THREAD					
#130 Code No.	Male Thread A	Female Taper B	Stock Size C	Length Under D	Overall Length Head E
AS-H245-7	5/8-18	4 RW	1	5/8	7/8
AS-H255-13		5 RW			1-5/8
AS-H247-7	7/8-14	4 RW			7/8
AS-H257-7		5 RW			
AS-H248-7	1-14	4 RW	1-1/4		
AS-H258-7		5 RW			

* Sealing Ring included on Straight Threaded Adapters

COPPER SEALING RINGS

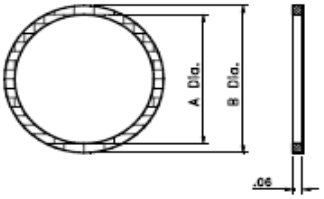

Part Number	A Dia.	B Dia.
760-0-0001	7/8 Dia.	1 Dia.
780-0-0001	1 Dia.	1-1/8 Dia.

EXAMPLE OF PART CODING:		
AS	=	STRAIGHT THREAD
H	=	HEX STOCK
R	=	ROUND STOCK
2	=	CLASS 2 COPPER
4	=	#4 RW FEMALE TAPER
7	=	EXTERNAL THREAD SIZE
8	=	LENGTH IN 1/8" INCREMENTS

ADDITIONAL LENGTHS,METRIC THREADS AND SPECIAL ADAPTERS AVAILABLE

Tip Adapters

FEMALE TAPER TO MALE PIPE THREAD					
#130 Code No.	Male Pipe Thread	Female Taper	Stock Size	Length Under Head	Overall Length
	A	B	C	D	E
AP-H24A-8 *	3/8			3/4	1
AP-H24B-7 *					7/8
AP-H24B-8					1
AP-H24B-10	1/2	4 RW	1	5/8	1-1/4
AP-H24B-12					1-1/2
AP-H24B-16					2
AP-H24B-20					2-1/2
AP-H24B-24					3
AP-H24C-7 *	5/8				7/8
AP-H24C-8					1
AP-H25A-13	3/8			3/4	1-5/8
AP-H25B-7 *					7/8
AP-H25B-8					1
AP-H25B-10	1/2	5 RW	1	5/8	1-1/4
AP-H25B-12					1-1/2
AP-H25B-16					2
AP-H25B-20					2-1/2
AP-H25B-24					3
AP-H25C-7 *	5/8				7/8
AP-H25C-8					1

EXAMPLE OF PART CODING:		
AP	=	PIPE THREAD
H	=	HEX STOCK
R	=	ROUND STOCK
2	=	CLASS 2 COPPER
4	=	#4 RW TAPER
A	=	3/8" MALE PIPE THREAD
B	=	1/2" MALE PIPE THREAD
C	=	5/8" MALE PIPE THREAD
D	=	3/4" MALE PIPE THREAD
8	=	LENGTH IN 1/8" INCREMENTS

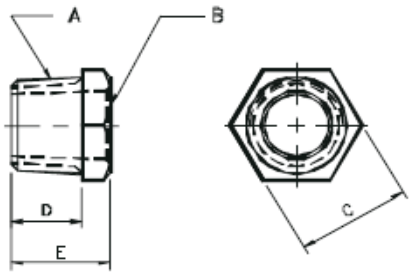

#130 Code No.	Male Pipe Thread	Female Taper	Stock Size	Length Under Head	Overall Length
	A	B	C	D	E
AP-H35D-11*					1-3/8
AP-H35D-12					1-1/2
AP-H35D-16		5 RW			2
AP-H35D-20					2-1/2
AP-H35D-24	3/4		1-1/4	7/8	3
AP-H36D-11*					1-3/8
AP-H36D-12					1-1/2
AP-H36D-16		6 RW			2
AP-H36D-20					2-1/2
AP-H36D-24					3
	* Denotes Minimum Length Available				

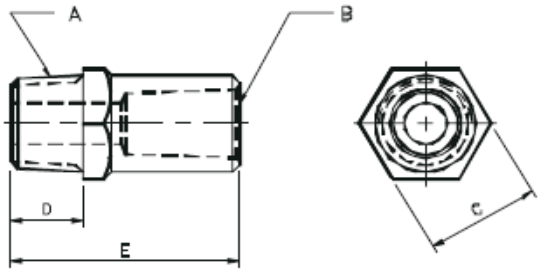

TAPER ADAPTER

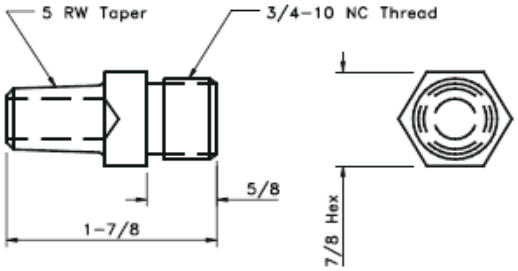

Holder & Adapter Combinations

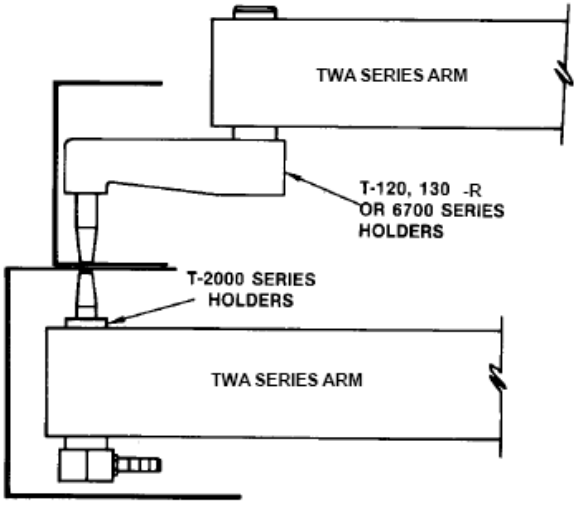

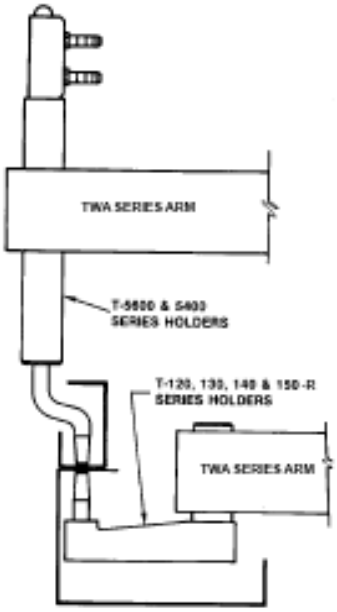

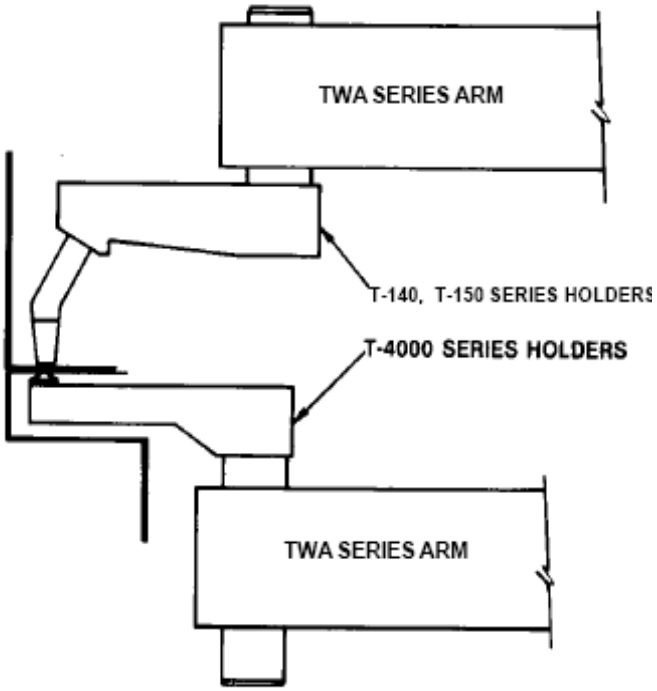

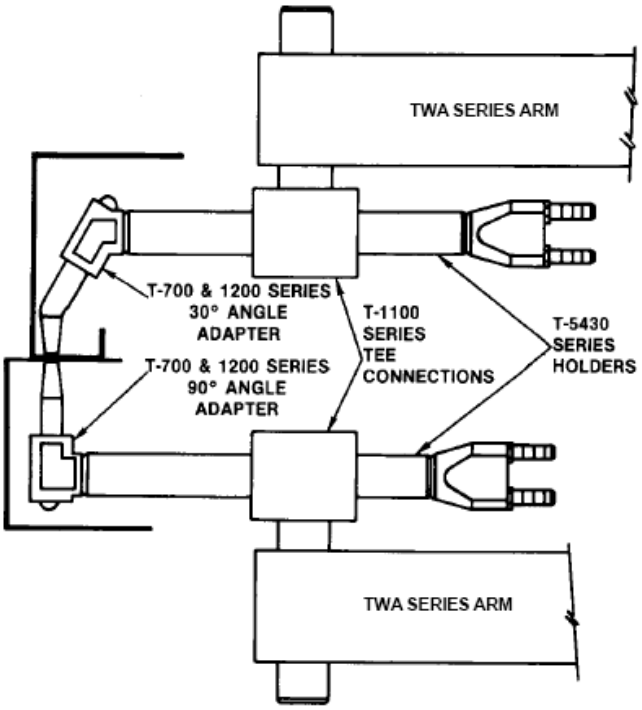

Platen Adapters

T-8000 SERIES

Use T-8000 series for 3-1/2" centerline

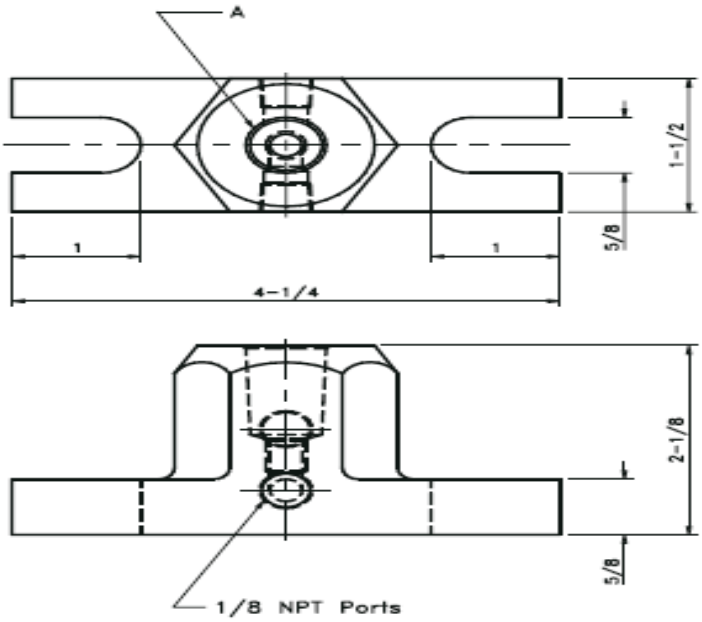

Part Number	Taper or Thread Size A
T-8001	4 RW (#1 MT)
T-8002	5 RW (#2 MT)
T-8003	6 RW -
T-8004	7 RW (#3 MT)
T-8005	SPECIAL 7RW
T-8006	1/2" NPT
T-8007	5/8" NPT
T-8008	3/4" NPT
T-8009	7/8-14 NFT
T-8010	1-14 NFT
T-8012	7/8-9 NC
T-8013	5/8-11 NC
T-8014	3/4-10 NC

T-8100 SERIES

Use T-8100 series for 5" - 6" centerline

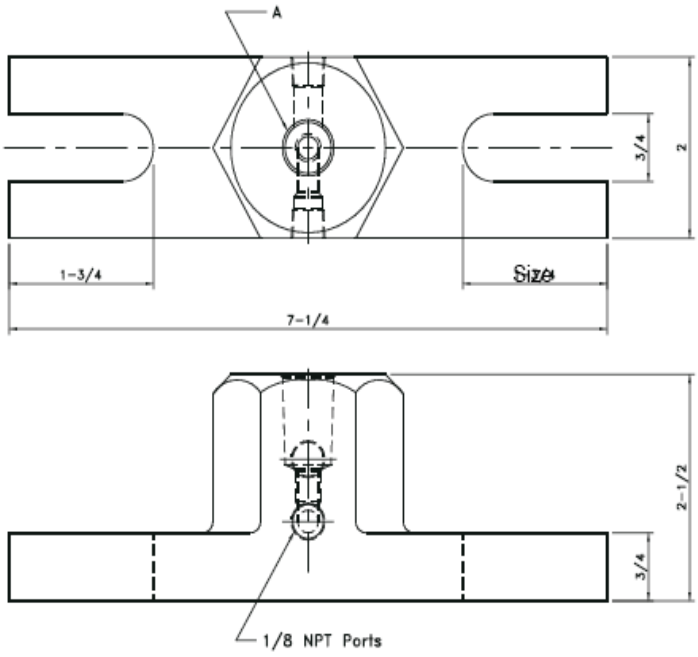

Part Number	Taper or Thread A
T-8102	5 RW (#2 MT)
T-8103	6 RW -
T-8104	7 RW (#3 MT)
T-8105	SPECIAL 7RW
T-8106	1/2" NPT
T-8107	5/8" NPT
T-8108	3/4" NPT
T-8109	7/8-14 NFT
T-8110	1-14 NFT
T-8111	T-230SERIES
T-8112	7/8-9 NC
T-8113	5/8-11 NC
T-8114	3/4-10 NC

Standard Straight Holders Non-Ejector Type

	Part Number	Holder Body Diameter A	Body Length B
4 RW Taper (#1 MT)	T-5400 **	3/4	8"
	T-5401	7/8	
	T-5402 *	1	
	T-5403	1-1/4	
	T-5404	1-1/2	
5 RW Taper (#2 MT)	T-5405	7/8	8"
	T-5406 *	1	
	T-5407 *	1-1/4	
	T-5408 *	1-1/2	
7 RW Taper (#3 MT)	T-5409	1-1/4	8"
	T-5410 *	1-1/2	

ALSO AVAILABLE IN THREADED STYLE

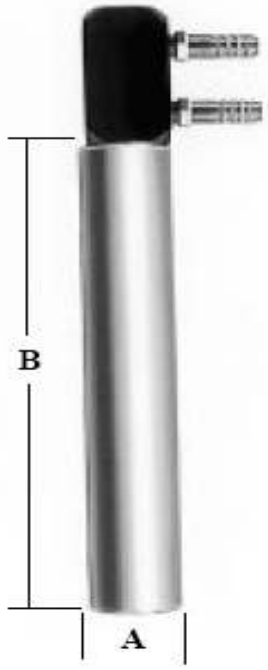

Standard Straight Holders Ejector Type

	Part Number	Holder Body Diameter A	Body Length B
4 RW Taper (#1 MT)	T-5600 **	3/4	8"
	T-5601	7/8	
	T-5602 *	1	
	T-5603	1-1/4	
	T-5604	1-1/2	
5 RW Taper (#2 MT)	T-5605	7/8	8"
	T-5606 *	1	
	T-5607 *	1-1/4	
	T-5608 *	1-1/2	
7 RW (#3 MT)	T-5609	1-1/4	8"
	T-5610 *	1-1/2	
8 Degree Taper .625 Eng.	T-5611	1	8"
	T-5612	1-1/4	
	T-5613	1-1/2	
8 Degree Taper .875 Eng.	T-5614	1-1/4	8"
	T-5615	1-1/2	

* ALSO STOCKED IN 12" BARREL LENGTHS

** EXTERNAL THREAD ON BARREL AT HOLDER HEAD

SPECIAL LENGTHS AVAILABLE

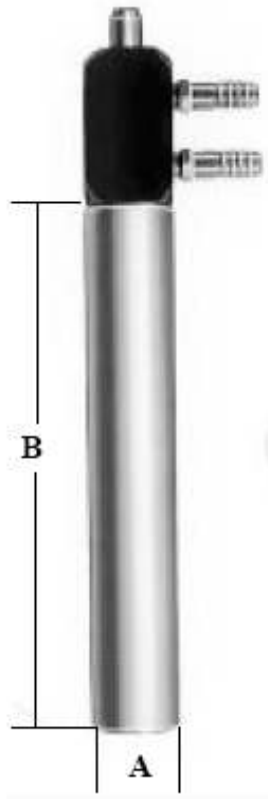

Close Coupled Holders

CLOSE COUPLED HOLDERS T-2000/T-2000E

	Part Number Non-Ejector Type	Part Number Ejector Type	Holder Body Diameter	Holder Body Length
4 RW Taper (#1 MT)	T-2000	T-2000-E	3/4	3
	T-2001	T-2001-E	7/8	
	T-2002	T-2002-E	1	
5 RW Taper (#2 MT)	T-2003	T-2003-E	1	3
	T-2004	T-2004-E	1-1/4	
	T-2005	T-2005-E	1-1/2	

Custom barrel lengths available

Offset & Paddle Type Holders

SPECIAL 20 DEGREE OFFSET HOLDERS

5 RW Taper (#2 MT)

Part Number	Shank Dia.
T-5200	1
T-5205	1-1/4

PADDLE TYPE HOLDERS

For use with Socket Type Tips as shown below

Part Number	Shank Diameter
T-4012	3/4
T-4014	7/8
T-4016	1
T-4020	1-1/4
T-4024	1-1/2
Replacement Screw P/N 10F37SHC	

Socket Tips Paddle Type Holders

SOCKET TIPS FOR USE WITH T-4000 HOLDERS

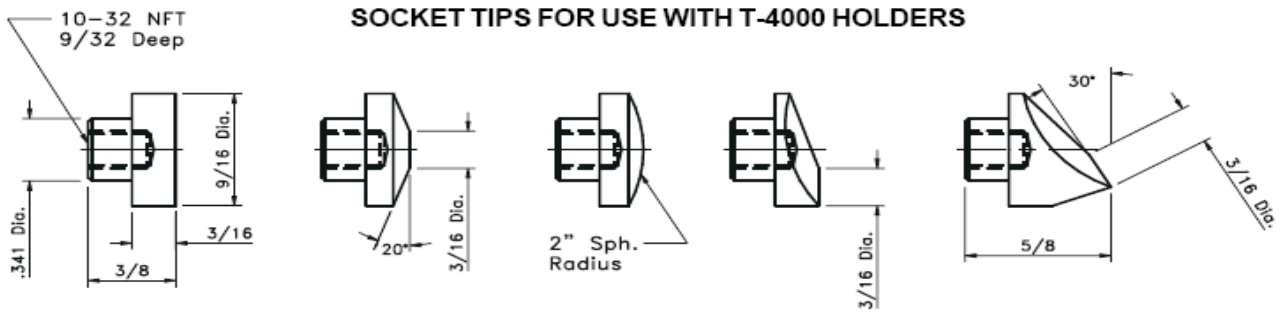

SP-228 | SP-282 | SP-299 | SPB-309 | SP-270

Light Duty Offset Holders

LIGHT DUTY - 90 DEGREE OFFSET

NON-EJECTOR TYPE

	Part Number	Offset	Shank Diameter
4 RW Taper (#1 MT)	T-121	2	3/4
	T-122		7/8
	T-123		1
	T-124		1-1/4
	T-131	4	3/4
	T-132		7/8
	T-133		1
	T-134		1-1/4
5 RW Taper (#2 MT)	T-127	2	7/8
	T-128		1
	T-129		1-1/4
	T-137	4	7/8
	T-138		1
	T-139		1-1/4

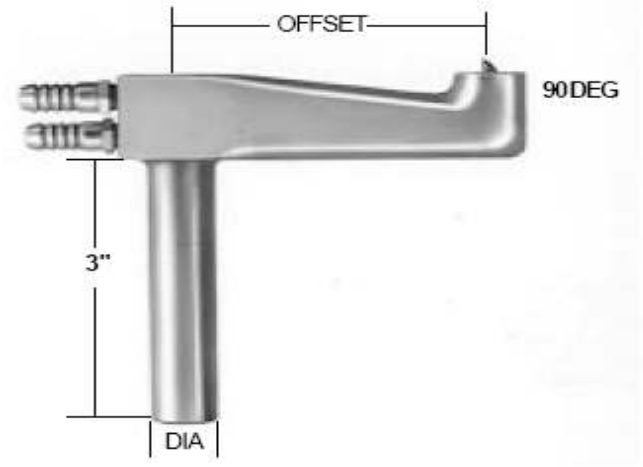

LIGHT DUTY - 30 DEGREE OFFSET

NON-EJECTOR TYPE

	Part Number	Offset	Shank Diameter
4 RW Taper (#1 MT)	T-141	2	3/4
	T-142		7/8
	T-143		1
	T-144		1-1/4
	T-152	4	7/8
	T-153		1
	T-154		1-1/4
5 RW Taper (#2 MT)	T-147	2	7/8
	T-148		1
	T-149		1-1/4
	T-157	4	7/8
	T-158		1
	T-159		1-1/4

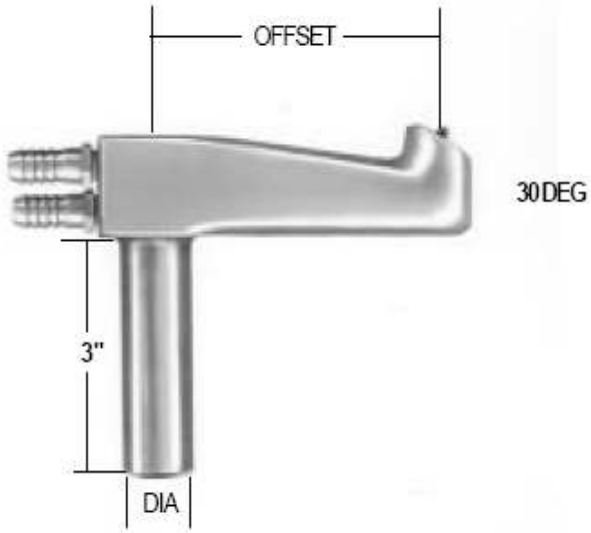

Teeter-Tip Dual Tip Adapters

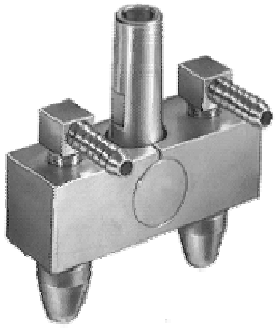

You can spot or projection weld in half the time by doubling the number of welds per machine stroke. Use Teeter-Tip dual tip adapters, which come with water-coolant fittings to beat high heat build-up. These adapters transmit total pressures of 1000 lbs., and deliver equal current and pressure to each tip. They compensate for normal electrode wear, imperfect tip dressing, and work variations up to .060 inch.

LIGHT-DUTY adapters have No. 4 or 5 RW shanks, tip spacing to 4 inches, tip sockets for 1/2 or 5/8 inch diameter male caps, or 4 RW tips (5/8 inch cap sockets are standard).

HEAVY-DUTY adapters have shanks from 5 to 7 RW size, tip spacing to 6 inches, tip sockets for 1/2 or 5/8 inch diameter male caps, or 4 or 5 RW tips (4 RW sockets are standard). These adapters have a deeper, stronger body.

The low-height 5/8 inch diameter cap-type tips are shown below. They are recommended for use in these adapters. Other standard caps, both 5/8 & 1/2 inch diameter, are tabled elsewhere. You must specify the size tip socket you want or the standard socket will be supplied.

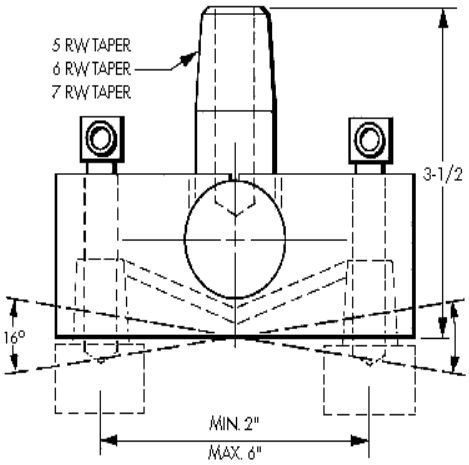

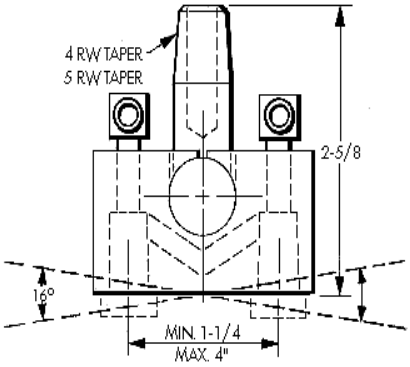

Style	Shank Taper	Description*	Tip Spacing Range (inches)	Socket Taper			
LIGHT Duty	4RW	TT-1408	1-1/4 to 2	4RW	4RW	4CT	5CT
	4RW	TT-1416	2 to 4	4RW	4RW	4CT	5CT
	5RW	TT-1508	1-1/2 to 2	4RW	4RW	4CT	5CT
	5RW	TT-1516	2 to 4	4RW	4RW	4CT	5CT
HEAVY Duty	5RW	TT-15516	2 to 4	4RW	5RW	4CT	5CT
	5RW	TT-15524	4 to 6	4RW	5RW	4CT	5CT
	6RW	TT-15616	2 to 4	4RW	5RW	4CT	5CT
	6RW	TT-15624	4 to 6	4RW	5RW	4CT	5CT
	7RW	TT-15716	2 to 4	4RW	5RW	4CT	5CT
	7RW	TT-15724	4 to 6	4RW	5RW	4CT	5CT

*When ordering, also state exact tip spacing and tip socket size. Example: TT - 1508 - 1-1/2 - 5CT (5CT means 5/8" diameter cap, 4CT means 1/2" diameter cap.)

TRUNCATED CONE SE-6332

(Item No 186-0552)

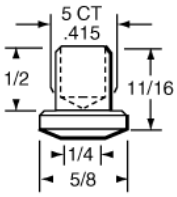

FLAT FACED SE-6296

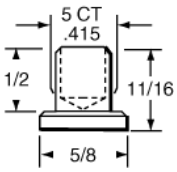

EQUATIP Dual Tip Holders

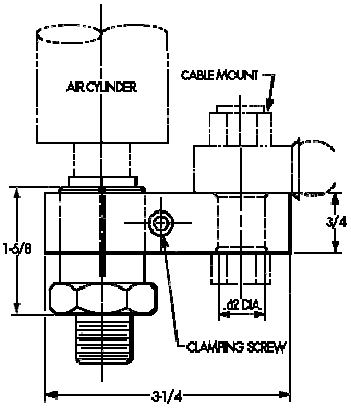

-Cylinder-mounting Adapter
-Shank, Item No. 195-7063
-Clamp, Item No. 194-2040, not included

The Equatip dual tip holder is a smaller version of the Equa-Press holder. It is more compact, and is more economical for those applications where it will work equally well. An even smaller device, the Equatip adapter (not water-cooled) is shown in box below.

Using the Equatip holder, both tips contact the work squarely, because tip axes remain parallel to direction of force (unlike the Teeter-Tip adapters). An internal roller equalizes current and pressure between the two electrodes, and will compensate for work height variations up to 1/16 inch.

The holders are ordered with either 1 or 1-1/2 inch spacing between barrels, and with tip sockets to accept either male caps (5/8 inch dia.) or straight No. 4 RW electrodes. (Bent tips are not recommended.) The distance between welds can be varied by rotating offset-nose tips in the barrels. On 1 inch spaced barrels, specialized spacing is available between 0.875 and 1.4 inches, and on 1-1/2 inch spaced barrels, specialized spacing between 1.25 and 2.125 inches is available.

Equatip holders can be supplied with straight shanks for arm mounting, a tapered adapter shank for holder mounting,or a cylinder adapter shank to be clamped to a cylinder rod.

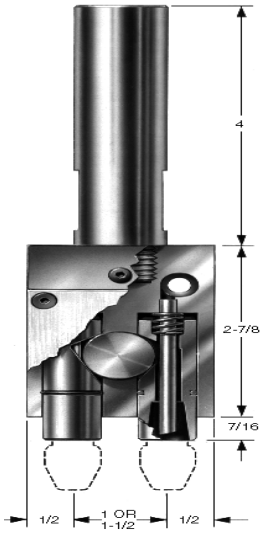

EQUATIP Holders

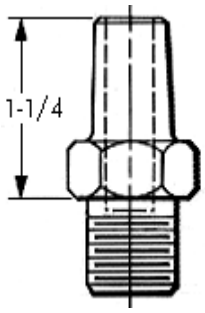

5RW Taper Adapter Shank
Item No. 195-5680

Tip Spacing & Mounting Style	For 5/8" Dia. Caps		For No. 4 RW Tips	
	Description	Item No.	Description	Item No.
ONE-INCH SPACING:				
1-in. shank	4050	350-4050	4055	350-4055
1-1/4-in. shank	4051	350-4051	4056	350-4056
1-1/2-in. shank	4052	350-4052	4057	350-4057
5RW adapter	4053	350-4053	4058	350-4058
Cylinder adapter*	4054	350-4054	4059	350-4059
1-1/2-INCH SPACING:				
1-in. shank	4150	350-4150	4155	350-4155
1-1/4-in. shank	4151	350-4151	4156	350-4156
1-1/2-in. shank	4152	350-4152	4157	350-4157
5RW adapter	4153	350-4153	4158	350-4158
Cylinder adapter*	4154	350-4154	4159	350-4159

For light-duty welding- EQUATIP Adapter

The Equatip dual tip adapter works like the Equatip holder, but it is not water-cooled and is meant for less demanding jobs. It costs less, and is a little smaller, barrels being 5/8 inch apart. Its straight tips are caps, 1/2 inch in diameter.

1/2-inch diameter Caps (4 CT)

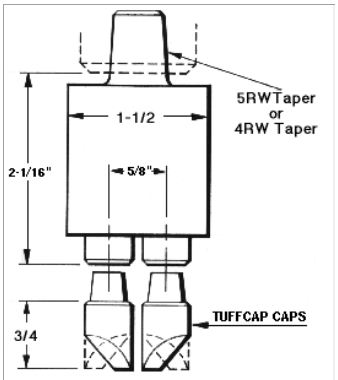

4045, Item No. 350-4045-5RW
4046, Item No. 350-4046-4RW

Nose Style	Alloy Class	Description	Item No.
Pointed	1	TA-14	111-0014
	2	TA-24	112-0024
Dome	1	TB-14	113-0014
	2	TB-24	114-0024
Flat	1	TC-14	115-0014
	2	TC-24	116-0024
Offset	1	TD-14	117-0014
	2	TD-24	118-0024

EQUAPRESS Dual Tip Holders

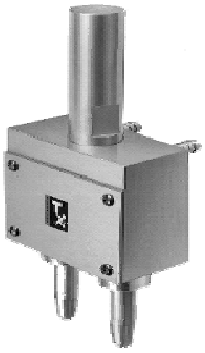

The Equa-Press Holder makes two identical welds at once. When it contacts the work piece, the forging pressure is automatically equalized between the two electrodes, regardless of variations in work thickness or electrode wear (up to 3/16 inch). The two tip-holding barrels are sliding pistons, whose movements are controlled by a mechanical equalizing slide in the housing (see cutaway drawings). The spring's only function is to return the barrels to a fully extended position when there is no work contact. Maximum conductivity is maintained through sturdy copper-alloy working parts. Absolute fidelity of weld spacing is maintained. Spacing can vary up to 4 inches, using bent offset tips in Equa-Press holders having the standard barrel spacing of two inches (shown)

Barrel spacing up to six inches is available as semi-standard (see price list). These are drilled to order from stock components. To order you must give the barrel spacing desired, along with the Item number (from the table). Example: 350-4012-3.25 ".

Equa-Press Holders are made in two mounting styles: platen models to mount directly to the platen on press-type welding machines, and shank models for rocker arm machines. All are available in two designs: the standard and the short (close-coupled) type. The short design is internally flood-cooled and takes up less space in the welder.

Note: For best results, position the holder so that a line drawn through the electrode centers is at, or nearly at, right angles to the direction of the welder arms. Otherwise, the magnetic field between the arms can cause an excess of current to flow through the inboard electrode.

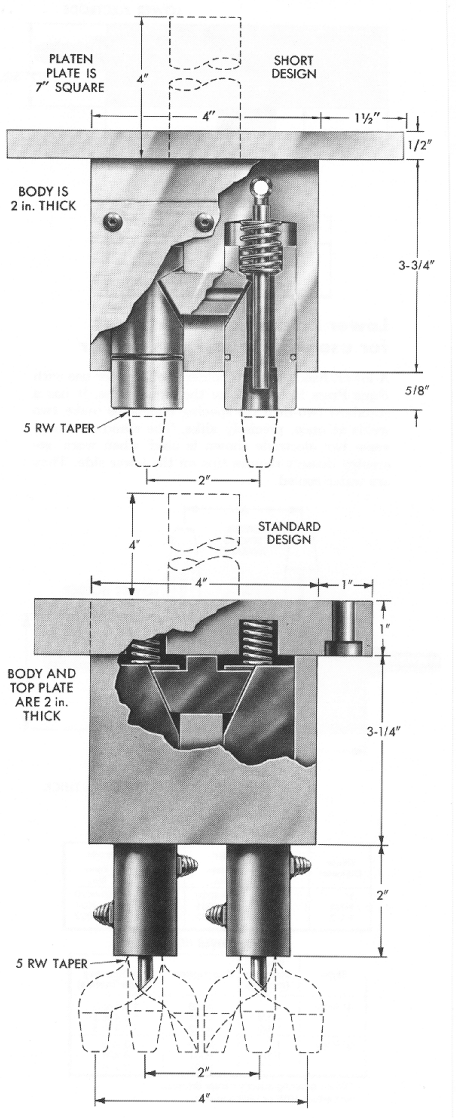

Mounting Style	Standard Design		Short Design	
	Description	Item No.	Description	Item No.
1-in. shank	4010	350-4010	4015	350-4015
1-1/4-in. shank	4011	350-4011	4016	350-4016
1-1/2-in. shank	4012	350-4012	4017	350-4017
Platen	4013	350-4013	4018	350-4018

EQUAPRESS Dual Tip Holders

Lower holders and electrodes for use with Equa-Press

A lower, fixed, dual tip holder is offered for use with Equa-Press Holders. Like the Equa-Press, it has a standard two-inch tip spacing and helps make two welds at once, precisely alike. The standard transverse bar electrode shown is used when work geometry does not require tips on the side. They are water-cooled.

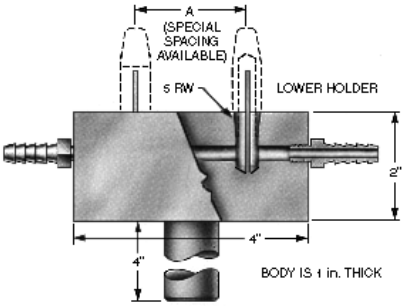

Standard Lower Holder

Shank Diameter	Lower Holder A=2 inches		Lower Electrode	
	Description	Item No.	Description	Item No.
1	4030	350-4030	4020	350-4020
1-1/4	4031	350-4031	4021	350-4021
1-1/2	4032	350-4032	4022	350-4022

SPECIAL LOWER HOLDER

Style	Shank Diameter (inches)	Description†	A Tip Spacing Range (inches)
4" Body	1	4030	1-1/4 to 3
	1-1/4	4031	1-1/4 to 3
	1-1/2	4032	1-1/4 to 3
8" Body	1	8030	3 to 6
	1-1/4	8031	3 to 6
	1-1/2	8032	3 to 6

† WHEN ORDERING, SPECIFY CENTER DISTANCE AND EITHER 4RW OR 5RW SOCKETS

Lower Electrode

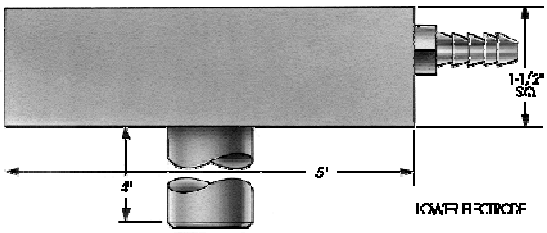

Shank Diameter	Description
1	4020
1-1/4	4021
1-1/2	4022

TRISPACER Triple Tip Holder

The Trispacer tip holder will make three spot welds at one time, automatically splitting the current and the pressure equally between the three tips. In doing so, it compensates for variations in work thicknesses and electrode wear - up to 3/16-inch.

The three tip-holding barrels are equidistant from one another, all falling on a 1-5/8 inch diameter circle (in the standard model shown). Using straight tips the weld pattern would form an equilateral triangle. However, the weld pattern can be widely varied by using standard or special bent tips. In fact, the three welds can be made in a straight line.

The Trispacer Holder works in the same simple mechanical way as the Equa-Press Holder: The tip-holding barrels have a limited up-and-down movement, to accommodate work conditions, and are adjusted to deliver equal pressure by the cone-shaped equalizing device in the housing. All current-carrying parts are made of RWMA copper alloys. It is made in two styles: to mount directly to the platen of press-type welders, and with shanks to fit in welder arms.

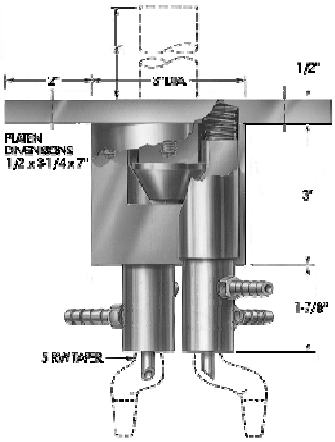

Mounting Style	Description	Item No.
1-in-shank	4040	350-4040
1-1/4-in. shank	4041	350-4041
1-1/2-in. shank	4042	350-4042
Platen	4043	350-4043

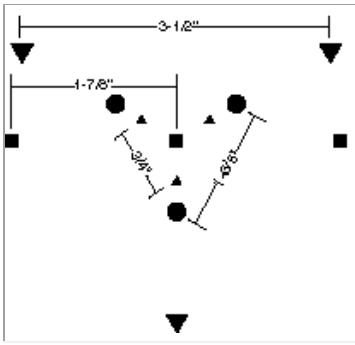

Diagram indicates the wide range of weld patterns which can be made with the Trispacer by using straight, standard bent or special bent tips.

Lower Electrode
A simple, water-cooled lower electrode is made for use with the Trispacer holder. Its three-inch-diameter face makes it usable with any weld pattern that may be developed for the Trispacer. It comes in three shank diameter models.

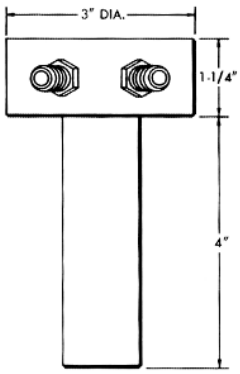

Shank Dia.	Description	Item No.
1	4025	350-4025
1-1/4	4026	350-4026
1-1/2	4027	350-4027

Fast Follow-up Holders

Fast-follow-up (low inertia) holders solve the problem of maintaining adequate weld pressure on rapidly collapsing projection welds - with fewer set-up problems and reduced maintenance.

These holders can be set to deliver fast-follow-up forces of from 140 to 1300 pounds, a range covering 90% of all projection welding operations. They are compact, water cooled, and easy to maintain.

Plus features of the fast-follow-up holder include: (1) wider range of pressures than any competitive make (2) no flexible shunt - a common cause of holder failure (3) use of standard, unmodified die springs, so if you need a spring of different strength, it's easily available (4) spring forces available are clearly indicated, so it's easy to set up for a specific force (5) three shank sizes, or it can be platen-mounted - the only fast-follow-up holder that can (6) extremely low height permits use where larger units cannot be used.

When used where no low-inertia holder had been used, these holders permit higher production rates with lower current consumption. Multiple welding set-ups are possible through use of a T-Bar clamp. Distance between holders is infinitely variable.

Fast-follow-up holders can be used to limit the weld pressure of any spot welding machine regardless of cylinder size or air pressure. This is better than reducing air pressure, which slows the return stroke and retards production

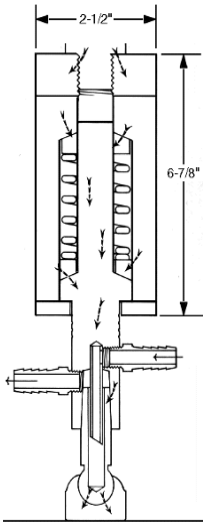

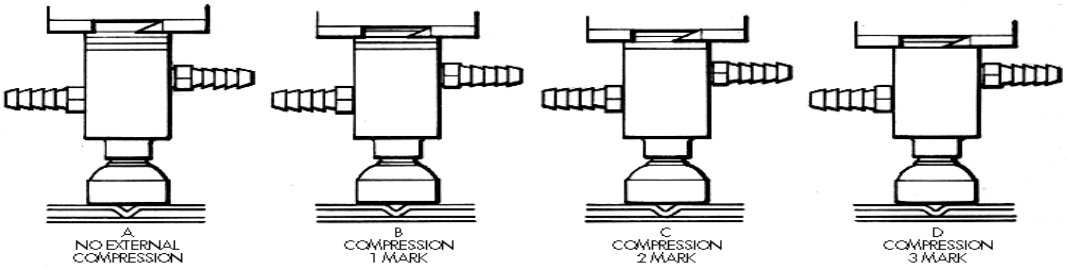

For every 1/8th of an inch that a fast-follow-up is compressed when setting up, a known amount of force is provided, to quickly follow up any reduction in work thickness. Example: at position B, a type MH spring would deliver 310 lbs., at C 440 lbs., etc.

Spring Type	1/8-in. Compression	1/4-in. Compression	3/8-in. Compression	1/2-in. Compression
M (300 lbs. max.)	140	200	250	300
MH (680 lbs. max.)	310	440	560	680
H (1300 lbs. max.)	600	840	1070	1300

Mounting Style	300 LBS. MAX. (M SPRING)		680 LBS. MAX. (MH SPRING)		1300 LBS. MAX. (H SPRING)	
	Description	Item No.	Description	Item No.	Description	Item No.
1" Shank	4620	350-4620	4621	350-4621	4622	350-4622
1-1/4" Shank	4623	350-4623	4624	350-4624	4625	350-4625
1-1/2 " Shank	4626	350-4626	4627	350-4627	4628	350-4628
Platen-Mtd.	4629	350-4629	4630	350-4630	4631	350-4631

Note:
All shunts are made from .005" thick laminations with 1/16" copper clips riveted in place **unless** otherwise ordered.

Specify Hole Pattern at both ends

T Indicates thickness of laminations only
O.L. Indicates outside leaf length

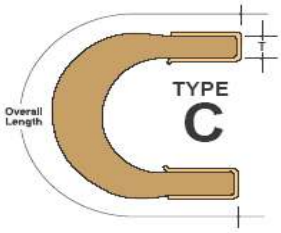

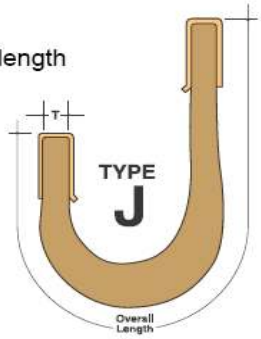

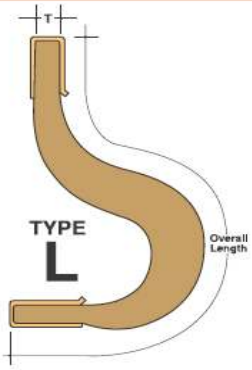

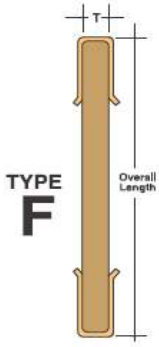

Type of shunt _____
C, J, L, F or special

Length of Longest Sheet _____
Overall Length

Width of Laminations _____

Thickness _____
(less clip)

Pattern # _____
1, 2, 3, 4, 5, or 6

Hole Size _____
or
Bolt Size _____

Hole Pattern Dimensions
A _____
A2 _____
B _____
C _____

Note:
When ordering, please supply a drawing or sketch specifying shunt thickness, width, outside leaf length and exact hole diameter location

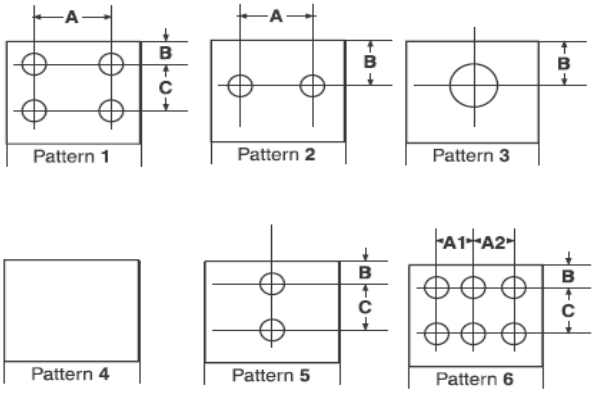

Rainbow Electronics * Phone: 905-565-1980 * FAX: 905-565-1981 * E-MAIL: welding@ rainbow-electronics.com

Air Cooled Jumper Cables

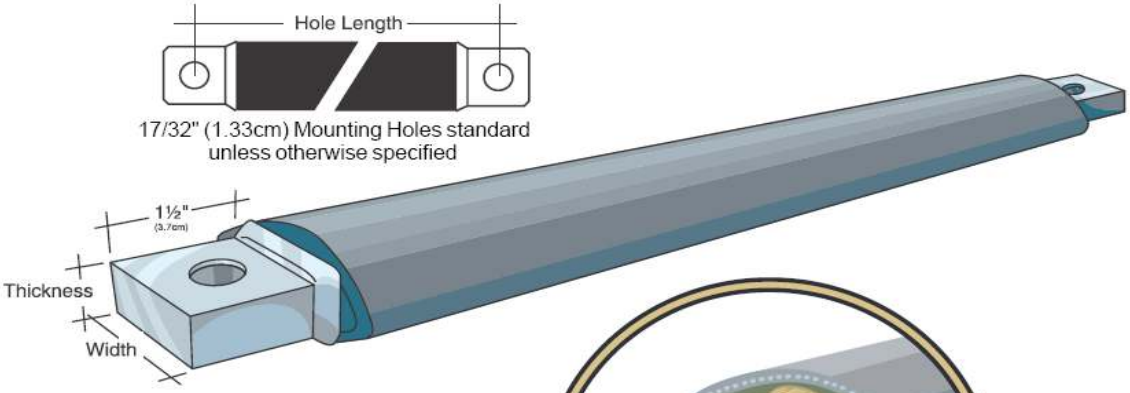

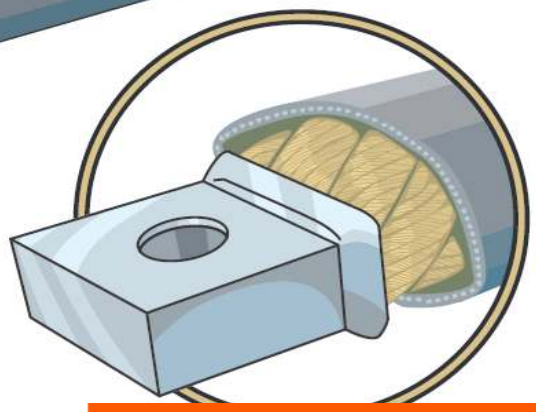

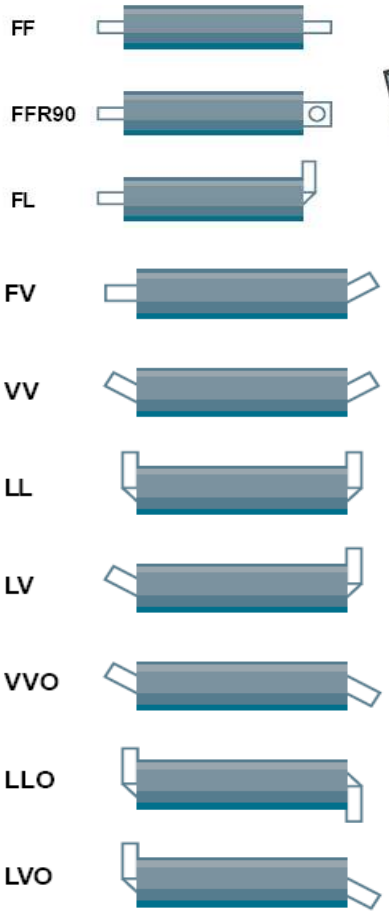

MCM	1-1/4" wide	1-1/4" wide	1-1/4" wide
400	3/8" Thick	—	—
500	7/16"	—	—
600	1/2"	7/16" Thick	—
750	5/8"	9/16"	—
1000	3/4"	1-1/16"	5/8" Thick
1200	7/8"	13/16"	3/4
1500	—	1-1/16"	1"
2000	—	—	1-7/16"

Specify the MCM size, length and lug combination and quantity of cables desired

Water Cooled Cable Jumpers

TERMINALS FOR WATER COOLED JUMPERS

Terminals furnished as shown **unless** changes are specified

HB-4

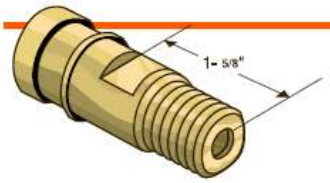

HB-5

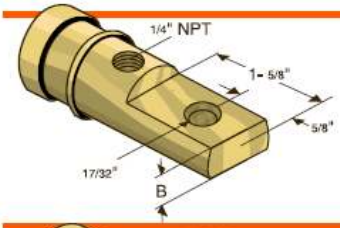

HB-6

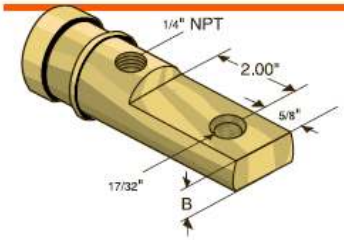

HB-6-2

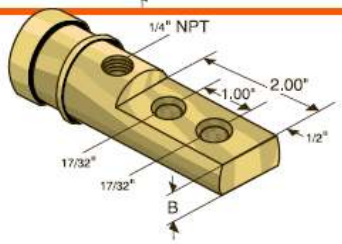

HB-7

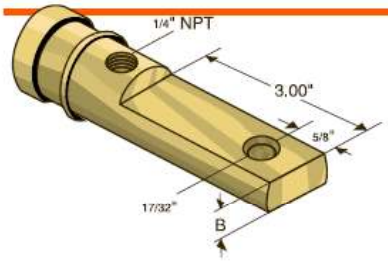

Water Cooled Cables

MCM Size	Terminal Dia.	Outer Hose Dia.
150-300MCM	1.00"	1-7/16"
350-400MCM	1-1/8"	1-9/16"
450-600MCM	1-1/4"	1-11/16"
650-750MCM	1-3/8"	1-13/16"
1000MCM	1-1/2"	1-15/16"

B=Thickness	B=Thickness
350-400MCM	450-1000MCM
9/16" Thick	5/8" Thick

Example

CB-5	CB-5	400-	20
Right End	Left End	MCM Rating	Length In Inches

HB

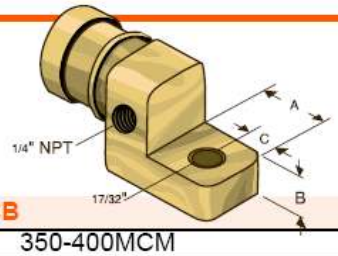

CB	A	B	C
350-400MCM	1-5/16"	1/2"	9/16"
450-600MCM	1-7/16"	1/2"	5/8"
750-1000MCM	1-1/2"	9/16"	5/8"

HDB

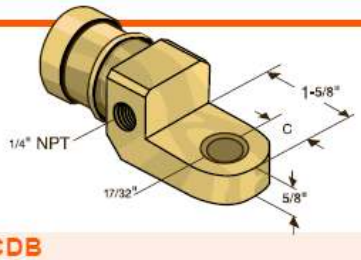

CDB	C
350-600MCM	9/16" back
750-1000MCM	5/8" back

HB-2

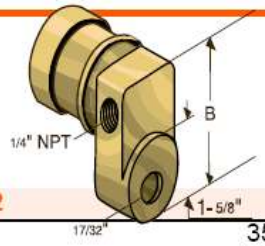

CD-2 1- 5/8"	B
350-400MCM	2-11/16"
450-1000MCM	3-1/8""

HB-9

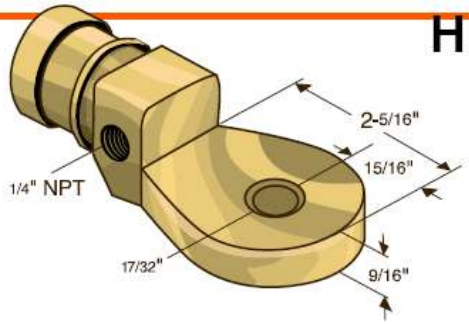

Water Cooled Cable Jumpers Selection Charts

Use the following method to determine what size cable should be used for your application. First you use the Conversion Factor chart to determine your "Continuous Duty Current"; then you read the correct size cable off the second chart. An example is worked out below.

Example Data:

6 cycles of current "on time" per weld
60 welds per minute
60,000 amps per weld
5 ft cable Length

Step 1
Lay one side of a straight edge across the graph at the six cycles of current "one time" point (the left hand vertical scale of the conversion factor chart).

Step 2
Pivot the other end of the straight edge across to line up with the "60 welds per minute" on the far right vertical scale.

Step 3
At the intersection of your straight edge with the diagonal conversion factor scale line, you should be able to read a conversion factor of .32 off the lower 1/2 of the line.

Step 4
Multiply the required current (60,000 amps) by the conversion factor (.32) to get the "continuous duty current" of 19,200 amps.

Step 5
Line up your straight edge on the 19,200 continuous duty amp mark, and find the intersection with your desired length line (from below, we want 60 inches).

Step 6
Any cable whose line is above this point may be safely used, since the load it would carry will be within its thermal capacity. In our case the 1000 MCM cable would be the best match, and will not exceed the design specifications of the jumper cable.

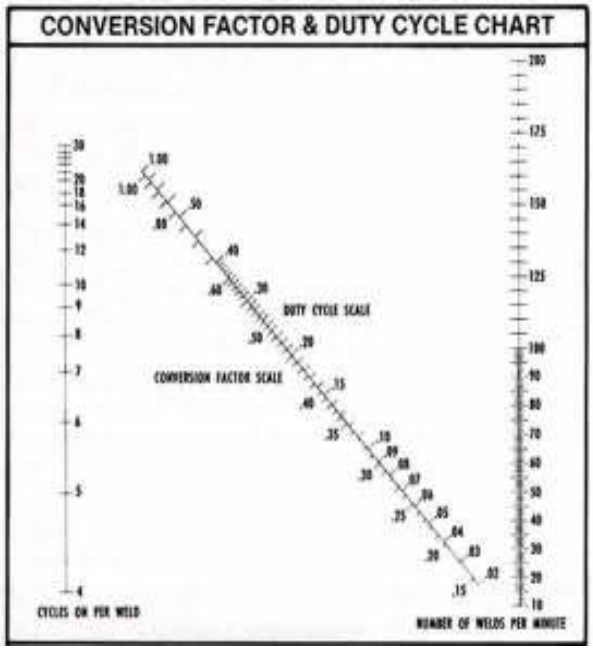

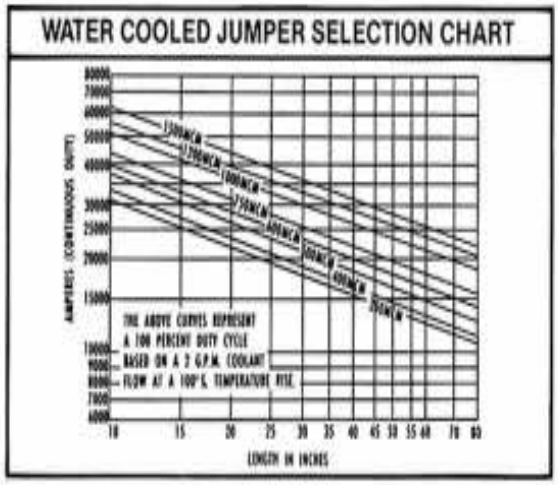

Cylinders

Rainbow Electronics carries a full line of replacement welding cylinders.
These cylinders are designed for use in multiple spot welding machines requiring close spacing and high force. We offer dual and triple piston models with up to 81.50 square inches of piston area (6520 pounds of force at 80 psi).

Some features include:
Non-Rotating Cylinder Rods - Insures proper alignment of electrodes and maintains cable clamp position for applications with limited space.

All Seals are Internal - Damage to the seals is minimized by having all seals located inside the cylinder body.

Low Impact Option – Permits a light touch when contacting the material to be welded. Helps to minimize marking and indentation on cosmetic welds.

Mounting styles include:
Stud Mount
Hair Pin
Flange

YOUR SOURCE FOR:

- **Resistance Welding Transformers**
- **Transgun/Robot Type Transformers**
- **Frequency Convertor Transformers**
- **Single and Three Phase DC Power Supplies**

Rainbow Electronics * Phone: 905-565-1980 * FAX: 905-565-1981 * E-MAIL: welding@ rainbow-electronics.com

Copper Bar Stock

Alloy Copper Bar Stock			
Solid Rounds		Rectangles	
Diameter	LBS./FT.	Size	LBS./FT.
1/8"	.05	1/4" x 1/2"	.48
3/16"	.11	1/4" x 7/8"	.84
1/4"	.19	1/4" x 1"	.96
5/16"	.29	1/4" x 1-1/2"	1.44
3/8"	.42	1/4" x 2"	1.92
		1/4" x 3"	2.88
7/16"	.58		
.482"	.70	3/8" x 3/4"	1.08
1/2"	.76	3/8" x 1"	1.44
9/16"	.95	3/8" x 2"	2.88
5/8"	1.18	1/2" x 1/2"	.96
3/4"	1.70	1/2" x 3/4"	1.44
7/8"	2.30	1/2" x 1"	1.92
1"	3.02	1/2" x 1-1/2"	2.88
		1/2" x 2"	3.84
1-1/8"	3.81	1/2" x 3"	5.76
1-1/4"	4.72		
1-3/8"	5.71	5/8" x 5/8"	1.50
1-1/2"	6.79	5/8" x 3/4"	1.80
1-3/4"	9.24	5/8" x 1"	2.40
		5/8" x 1-1/2"	3.60
2"	12.06	5/8" x 2"	4.86
2-1/4"	15.27		
2-1/2"	18.86	3/4" x 3/4"	2.16
2-3/4"	22.81	3/4"x 1"	2.88
		3/4" x 1-1/2"	4.32
3"	27.14	3/4" x 1-3/4"	5.04
3-1/8"		3/4"x 2"	5.76
3-1/4"		3/4"x 2-1/2"	7.20
3-3/8"	34.36	3/4" x 3"	8.64
3-1/2"			
3-5/8"	39.63	1"x 1"	3.84
3-7/8"	45.29	1" x 1-1/4"	4.80
		1" x 1-1/2"	5.76
4"		1" x 2"	7.68
4-1/8"	51.23	1" x 2-1/2"	9.60
4-3/8"	57.73	1" x 3"	11.52
4-1/2"			
4-5/8"	64.52	1-1/4" x 1-1/4"	6.00
5-1/8"	79.14	1-1/4" x 1-1/2"	7.20
6-1/8"	111.68	1-1/4" x 1-3/4"	8.40
Sizes Not Listed Are Available Upon Request		1-1/4" x 2"	9.60
		1-3/8" x 3"	15.84
		1-1/2" x 1-1/2"	8.64
		1-1/2" x 2"	11.52
		1-1/2" x 3"	17.28
		1-3/4" x 2"	13.44
		1-3/4" x 3"	
		2" x 2"	15.36
		2" x 3"	23.55

RAINBOW ELECTRONICS

WATER CHILLERS

SAVE YOUR COMPANY MONEY BY INSTALLING A WATER CHILLER!!!

- Increase quality production output of your welding department
- Reduce copper replacement and tip dressing
- Eliminates almost all water consumption!!!
- Available in sizes from: 1/3 Ton – 50 Ton

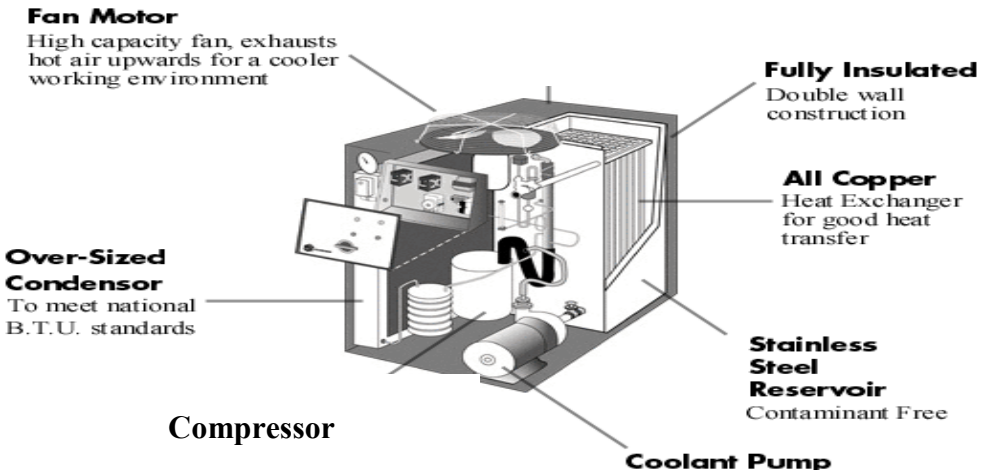

FUME EXTRACTORS

Full Line of Fume Extractors, Downdraft Tables, Capture Arms and Centralized Dust Collectors,

Rainbow Electronics * Phone: 905-565-1980 * FAX: 905-565-1981 * E-MAIL: welding@ rainbow-electronics.com

Nut Feeders

Options

- Rotary style bowl as a low cost option for square weld nut selection
- Double type selection mechanism for simultaneous feeding of two nuts
- Special double type allows feeding of only right side, only left side, or both sides simultaneously
- 150mm or 300mm special stroke feed units available
- Reverse mounted control panel for locating the feeder inside fenced work cells
- "No control" option for operation through your own PLC
- Orientation guide to allow orientation of T-shape nuts within +/- 5 degrees
- Optical sensors to ensure proper selection and orientation of various nut configurations
- Pneumatic nut locator on lower electrode to virtually eliminate weld spatter in nut threads
- Available in various colors

Features

- 300mm vibratory bowl
- PLC Microprocessor Transistor Output Controller by Keyence
- Programmable screen allows control of PLC without a laptop
- Dual key locked control panel prevents unauthorized access to controls
- Manual controls on outside of control panel
- 3m flexible vinyl tube to deliver nuts to feed unit
- 200mm stroke magnetic feed unit to accurately deliver nuts
- Universal mounting bracket allows mounting at almost any angle
- Seven liter capacity bulk hopper with limit switch maintains proper supply of nuts to the vibratory bowl
- Vinyl dust cover prevents contamination from weld spatter
- Complete pneumatic system with regulator and filter
- Feed rates up to 50 nuts per minute
- Nut separator allows individual nuts to be blown one at a time into the feed unit

Benefits

- Unique selection mechanism deigned specifically for your nut ensures repeatability
- Magnetic feed unit ensures accurate positioning of nut on the electrode
- Custom designed bowls provide high feed rates
- PLC to control PokeYoke devices
- Specially designed vinyl tubes allow feeders to be located 10 or more feet from the welder electrode
- Ability to feed nearly any shape and size of weld nut

Rainbow Electronics * Phone: 905-565-1980 * FAX: 905-565-1981 * E-MAIL: welding@ rainbow-electronics.com

TE1600 WELD TESTER

TE1600 WELD TESTER

Portable instrument purposely designed for measuring the parameters of resistance welding. By using probes of different kind, the same instrument enables you to measure both the welding current and the force at the electrodes. The power of the 32-bit microprocessor and the accuracy of the 12-bit A/D converter make the instrument a highly performing one.

It is suitable for measuring on standard machines in alternate current (AC), direct current three phase rectified and medium frequency machines (DC), and capacitor discharge machines (CDW):

AC: measures the true effective value (RMS), maximum value and average value;
measures the peak value: positive and negative values;
measures the conduction angle in degrees;
measures the welding time in cycles, in ½ cycle steps.

DC: measures the average value, the maximum value and the welding time in ms.

CD: measures the peak value and the welding time.

ACCESSORIES

TIP SOCKET REAMERS
Hole in reamer center permits water tube entry; no need to dismantle holder. 4 RW, Item No. 601-0004; 5 RW, Item No. 601-0005; 6 RW, Item 601-0006; 7 RW, Item No. 601-0007.

TIP DRESSING TOOL
To remove mushroomed nose material on a pair of tips of 4 or 5 RW size, having pointed or dome noses. Other nose design dressers on special order. Dresser, Item No. 601-0102; Dresser cutter, Item No. 601-0103.

RADIUS TIP FILE
To restore original contours of welding tips use this two-inch radius file. Item No. 601-0120.

WELDING TIP EXTRACTORS
No. 4 RW, EX-1, Item No. 601-0201
No. 5 RW. EX-2. Item No. 601-0202

WELDING TIP EXTRACTORS
No. 4 RW and 5 RW at opposite ends, EX-3, Item No. 601-0203

WELDING TIP EXTRACTORS
Large: EX-10-A, Item No. 601-0231

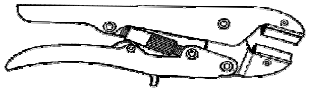

TOGGLE-TYPE MALE CAP EXTRACTOR
Model EX-4 adjusts to handle size 4 & 5 RW shanks and caps.

MALE CAP EXTRACTOR
has long-lever handles for easier cap removal. In two dual-size models: EX-45 and EX-56

FEMALE CAP EXTRACTORS
are made for three Tuffcap shank sizes: Models Ex-4F, Ex-5F, and Ex-6F.

QUICK-CONNECT COUPLINGS with automatic shut-off
Use these couplings to make up efficient, trouble-free coolant systems. Any plug shown will mate with any socket shown. Always put the socket on the upstream side of a connection. Its built-in valve will automatically close upon disconnection

1/8" NPT FEMALE PLUG
ITEM NO. 601-0300

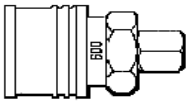

1/8" NPT FEMALE SOCKET
ITEM NO. 601-0314

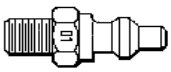

1/8" NPT MALE PLUG
ITEM NO. 601-0301

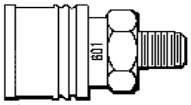

1/8" NPT MALE SOCKET
ITEM NO. 601-0315

1/4" NPT FEMALE PLUG
ITEM NO. 601-0302

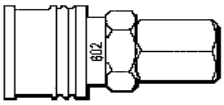

1/4" NPT FEMALE SOCKET
ITEM NO. 601-0316

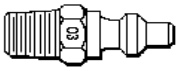

1/4" NPT MALE PLUG
ITEM NO. 601-0303

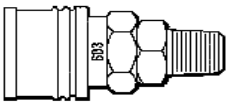

1/4" NPT MALE SOCKET
ITEM NO. 601-0317

3/8" HOSE PLUG
ITEM NO. 601-0309

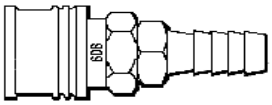

3/8" HOSE SOCKET
ITEM NO. 601-0320

Pneumatic Manual Tip Dressers

These tools offer you the advantage of dressing your electrodes on the welder, thus saving you expensive downtime required when changing tips. When you have the correct tip shape you will be able to maintain longer weld schedules. We offer a full range of hand held pneumatic dressers. We can provide you a tool to meet your individual need, from light occasional usage to the heaviest demand. Our blade setups easily fit into each tool.

This chart shows graphically the importance of electrode maintenance. This is not only important for the quality of weld, which is of first importance, also extra load added to the welding machine and equipment. Read the data on the chart, you can then draw your own conclusions.

YOU CAN'T AFFORD TO NEGLECT YOUR ELECTRODES!!!
Keep your electrodes dressed for maximum production and quality welds

RESISTANCE WELDING

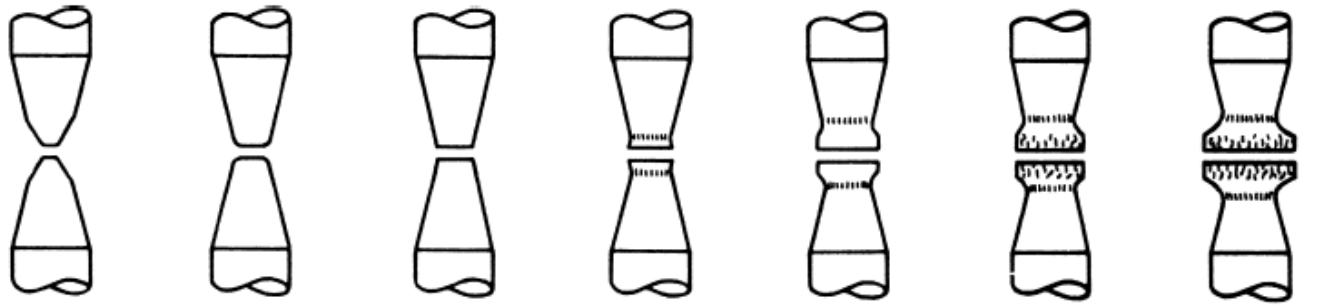

400% TOO SMALL (A)	PROPER NEW TIPS (B)	56% TOO LARGE (C)	125% TOO LARGE (D)	300% TOO LARGE (E)	525% TOO LARGE (F)	800% TOO LARGE (G)
Approx. 1/81 sq. in. at 1/8" Dia.	Approx. 1/20th sq. in. at 1/4" Dia.	Approx. 1/13th sq. in. at 5/16" Dia.	Approx. 1/9th sq. in. at 3/8" Dia.	Approx. 1/5th sq. in. at 1/2" Dia.	Approx. 1/3rd sq. in. at 5/8" Dia.	Approx. 1/2 sq. in. at 3/4" Dia.
2,460 amperes only would be required (†)	9,823 amperes would be required (†)	15,337 amperes would be required (†)	22,100 amperes would be required (†)	39,300 amperes would be required (†)	61,350 amperes would be required (†)	88,500 amperes would be required (†)
127,640 lbs. sq. in. pressure (*)	31,960 lbs. sq. in. pressure (*)	20,470 lbs. sq. in. pressure (*)	14,200 lbs. sq. in. pressure (*)	7,990 lbs. sq. in. pressure (*)	5,120 lbs. sq. in. pressure (*)	3,500 lbs. sq. in. pressure (*)
RESULT: Four times too much pressure, current. Very severe indentation and spitting from high current density. **CORRECTION:** Cut pressure to 1/4 Cut current to 1/4	**RESULT:** Correct pressure, current, tips. Excellent weld. This is the size tip (new) for which the pressure, time, and current are adjusted.	**RESULT:** Only 60% of proper pressure, current. Borderline weld. Lower strength. Last diameter size tolerated unless current and pressure were set between the 1/4 and 5/16 size tips.	**RESULT:** Only 45% of the required pressure and current. Welds would be unacceptable. If the current or time were increased with tips in this condition a large weak weld would result.	**RESULT:** Only 25: of required current and pressure. No weld would be made if tips were left in this condition.	**RESULT:** Only 16% of required current and pressure. This is a very serious condition and the only cure is to dress the tips back to (B) condition.	**RESULT:** Only 11% of needed current and pressure. This is an absurd (though often seen) condition that only heats a spot.

(†)Current density required for this gage to be 200,000 amps per sq. in. Setting is 9,900 amps for condition (B)

(*) Five inch diameter air cylinder A 80 lbs. air pressure—1570 lbs. on ram.

Weld Force Gauges

Digital Weld Force Gauges

Digital Sensor Features:
Peak hold
Zero adjust knob
Auto shut off
.5" digits read in single lb. increment
5,000 sensor range

Specifications:
Performance
Pressure Ranges: Vacuum to 10,000 psi
Overpressure: 2x full scale without damage
Burst Pressure: 10x full scale or 20,000 PSIG (whichever is less)
Pressure Cavity Volume: 0.07 in^3 typical
Accuracy (linearity, hysteresis, and repeatability): ±0.25% of full scale
Compensated temperature range: 30°F to 130°F
Thermal zero shift: ±0.02% F.S./°F
Thermal sensitivity shift: ±0.02% F.S./°F
Resolution (Transducer): Infinite
(Display): 1 part in 10,000
Life: 10 million cycles minimum

Electrical:
Batteries: Standard 9v (user replaceable)
Life: 1500 hours continuous on
Display: 4 digit LCD, .5" digits
Auto Off: Factory setable to 15 minutes

Physical:
Case: Injection molded case Material EMI-X PDX-W-88341
Wetted Materials: 15-5 Stainless Steel
316 S.S. available at no extra charge

Available Options:
Available Connections Include:
Flex/SW 15° 11" OA, Flex/SW 15° 15" OA, Flex/SW 90° 15" OA
Flex/SW 180° 19" OA, Standard 5" Grip, 6" OA w/o Grip
Super Heavy Duty
(Additional lengths available in 6" increments)

Options Include:
Plat Poly, Flat S.S., .75" Locator Poly, .75" Locator S.S.
5" Rad S.S., Thin Flat Poly, Thin .75" Poly, Thin .75" S.S.

Live Pad available in Standard and Reverse.
Rear Pad available in Flat, Thin rear flat, and Custom.

Certificate of calibration available.

Standard Weld Force Gauges

Shock resistant
--Dampened movement allows entry to calibrate to zero on pointer shaft.
Quick and easy to read response
--Black pointer is accurate clamping pressure.
--Red maximum pointer will record the initial shock of 30 cycles (.5 sec) without whip action or drag.

Easy to use
--Inverted dial on standard 2,000lb/kilo scale.
--Lens is replaceable.

Safe
--The handle is a tough 5" safety grip.
--Extension is available in flex or swivel up to 12"

Customizable
--Load Cell Pad available in stainless, flat, 3/4", or 5" radius.
--Retrofit Rear Pad is non conductive, available flat, 3/4", or 5" radius.

Available Sensors Include:
Cushioned Sensor
2.5" w/ pointer
4.0" (with or without pointer)
4.5" process
4.5 w/ pointer
Custom
Digital
Glycerin Filled

Available Connections Include:
Flex/SW 15° 11" OA, Flex/SW 15° 15" OA, Flex/SW 90° 15" OA
Flex/SW 180° 19" OA, Standard 5" Grip, 6" OA w/o Grip
Super Heavy Duty

(Additional lengths available in 6" increments)

Sensor Range:
200, 300, 600, 1000, 2000, 3000, 4000, 5000, 10000, 15000

Options Include:
Plat Poly, Flat S.S., .75" Locator Poly, .75" Locator S.S., Custom
5" Rad S.S., Thin Flat Poly, Thin .75" Poly, Thin .75" S.S.

Live Pad available in Standard and Reverse.
Rear Pad available in Flat, Thin rear flat, and Custom.

Certificate of calibration available.

Rainbow Electronics Carries a full range of Welding Controls.
Whatever your application – We have the Control for you.

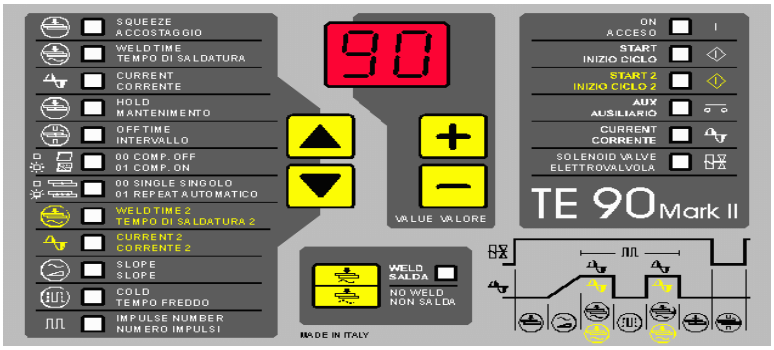

TE90

TE90 is a microprocessor welding control unit for single-phase resistance welders. The welding control unit is used to control the welder parts and, in particular, the thyristor regulating the welding current. The working cycle carried out by the TE90 is described through the programming parameters. The TE90 can be used for both manual and pneumatic-operated welders.

We also Carry :
WTC
Unitrol
Entron

With our Highly Trained Technicians always on Call, We can provide Service on ALL Makes of Controls

Rainbow Electronics Spotwelding Inc. Manufacturers a complete line of Resistance Welding Equipment – From Standard Rocker Arm Welders to the most Intricate Custom Machines.

Standard Resistance Welders

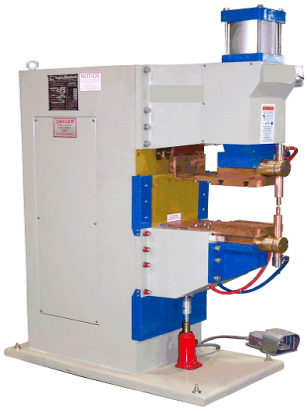

Press Welders:
50 KVA
80 KVA
100 KVA
150 KVA
200 KVA
250 KVA

Rocker Arm Welders:
15 KVA
20 KVA
25 KVA
30 KVA
50 KVA

Available in Foot Operated and Pneumatic.

Seam Welders:
35 KVA
80 KVA
100 KVA
150 KVA

Available in Circular and Longitudinal Style. 3 phase optional. Custom Designs also available. Other KVA ratings also available.

Rainbow Electronics * Phone: 905-565-1980 * FAX: 905-565-1981 * E-MAIL: welding@ rainbow-electronics.com

Press/Projection Welder
80 – 300 KVA

The ZDN Series of Spot/Projection Welders offers you simplified versatility to meet your parts production and resistance welding needs.

Switch from spot to projection welding with minimal changeover time.

Standard Features:

Fabricated steel ram, guided by inline bearings to insure positive alignment, minimal deflection and reduced friction.

Low friction air cylinders.

Single stage foot switch.

Hydraulic Jack for raising and lowering the knee.

3" ram stroke, air pressure regulator gauge and air exhaust muffler.

	Model					
Item	**80**	**100**	**150**	**200**	**250**	**300**
Rated Power @ 50% KVA	80	100	150	200	250	300
Rated Primary Power (V)	440/550	440/550	440/550	440/550	440/550	440/550
Secondary Voltage (V)	6.6~8.2	7.3~9.1	9.5~11.8	10.5~13.5	11.8~14.6	13.5~15.8
Rated Frequency (Hz)	60	60	60	60	60	60
Max. Short Circuit Current (A)	27200	41000	52000	65000	76000	88000
Max Weld Power (KVA)	160	280	330	410	500	600
Arm Extend Dimensions (in.)	20.5	20.5	20.5	20.5	20.5	20.5
Weld Force (lbs)	1655	2711	2711	4047	4047	4047

Rainbow Electronics * Phone: 905-565-1980 * FAX: 905-565-1981 * E-MAIL: welding@ rainbow-electronics.com

Rocker Arm Welder
25 & 50 KVA

Standard Features:

- Heavy Duty Steel Frame
- Water Cooled Transformer
- Water Cooled SCR (with optional Control)
- Water Cooled Electrodes and Holders
- Adjustable Lower Arm
- Low Friction Air Cylinder
- Standard 24” Throat Depth
- Air Pressure Regulator
- Air Exhaust Muffler

Transformer Specifications	
Item	**50 KVA**
Power Supply	440/550
Frequency (Hz)	60
Phase	1
Duty (%)	50
Secondary Voltage (V)	5.3~6.5
Cooling Water Flux (GPM)	2.5
Length (in)	14 3/4
Width (in)	9 5/8
Height (in)	13 3/8

Item	25R KVA	50R KVA
Rated Power @ 50% KVA	25	50
Rated Primary Power (V)	220/440/550	220/440/550
Secondary Voltage (V)	4.3	5.3~6.5
Rated Frequency (Hz)	60	60
Max. Short Circuit Current (A)	12500	18600
Max Weld Power (KVA)	53	100
Arm Extend Dimensions (in.)	24	24
Weld Force (lbs)	675	1100

Rainbow Electronics * Phone: 905-565-1980 * FAX: 905-565-1981 * E-MAIL: welding@ rainbow-electronics.com

Bench Welder 25 & 50 KVA

Item	25B KVA	50B KVA
Rated Power @ 50% KVA	25	50
Rated Primary Power (V)	220/440/550	220/440/550
Secondary Voltage (V)	4.3	5.3~6.5
Rated Frequency (Hz)	60	60
Max. Short Circuit Current (A)	12500	18600
Max Weld Power (KVA)	53	100
Arm Extend Dimensions (in.)	13.4	13.4
Weld Force (lbs)	675	1100

Standard Features:

*Heavy Duty Steel Frame *Water Cooled Transformer *Water Cooled SCR (with optional Control)
*Water Cooled Electrodes and Holders *Adjustable Lower Arm
*Low Friction Air Cylinder *Air Pressure Regulator *Air Exhaust Muffler

Press/Projection Welder 50 KVA

Item	50L KVA
Rated Power @ 50% KVA	50
Rated Primary Power (V)	220/440/550
Secondary Voltage (V)	5.3~6.5
Rated Frequency (Hz)	60
Max. Short Circuit Current (A)	18600
Max Weld Power (KVA)	100
Arm Extend Dimensions (in.)	13.4
Weld Force (lbs)	1100

Standard Features:

*Heavy Duty Steel Frame *Water Cooled Transformer *Water Cooled SCR (with optional Control) *Water Cooled Electrodes and Holders *Adjustable Lower Arm *Low Friction Air Cylinder *Standard 13.4” Throat Depth *Air Pressure Regulator *Air Exhaust Muffler

Economy Welders

Save Money with our ECONOMY Line of Welders. Same Great Quality and Performance with just a few small variations: Slightly smaller frame, non-adjustable lower knee and a single Ram (Press Welders)

ECONOMY
Press/Projection Welders
50-200KVA

ECONOMY
Rocker Arm Welders
25-50 KVA

Rainbow Electronics * Phone: 905-565-1980 * FAX: 905-565-1981 * E-MAIL: welding@ rainbow-electronics.com

High Speed Wire Welder
50, 80 & 100 KVA

Specifically designed for Wire welding with high speed capabilities.

Built on a heavy duty steel fabricated frame

- Water Cooled Transformer
- Water Cooled Electrodes and Electrode Holders
- Low Friction Air Cylinder
- 3" Ram Stroke
- Air Pressure Regulator Gauge
- Air Exhaust Muffler

Item	50 KVA	80 KVA	100 KVA
Rated Power @ 50% KVA	50	80	100
Rated Primary Power (V)	440/550	440/550	440/550
Secondary Voltage (V)	6.7~4.7	8~6	8.6~6.6
Rated Frequency (Hz)	60	60	60
Max. Short Circuit Current (A)	19500	27200	33000
Throat Depth (mm)	340	520	520
Weld Force (lbs)	1065	1655	2710
Max. Welding Capacity (KVA)	100	170	250
Water Consumption 2.5bar (L/min)	8	8	8
Dimensions (mm)	1600x1000x500	1700x1200x700	1700x1200x700

Rainbow Electronics * Phone: 905-565-1980 * FAX: 905-565-1981 * E-MAIL: welding@ rainbow-electronics.com

Circular & Longitudinal Seam Welder
35 - 200 KVA

SEAM WELDING MACHINE

Model / Item		ZFNL-35	ZFNC-35	ZFNL-50	ZFNC-50	ZFNL-80	ZFNC-80	ZFNL-100	ZFNC-100	ZFNL-150	ZFNC-150	ZFNL-200	ZFNC-200
Power suply 60Hz	KVA	35	35	50	50	80	80	100	100	150	150	200	200
Primary voltage	V	440/550	440/550	440/550	440/550	440/550	440/550	440/550	440/550	440/550	440/550	440/550	440/550
Primary current	A	92	92	131	131	210	210	263	263	390	390	420	420
Duty cycle	%	50	50	50	50	50	50	50	50	50	50	50	50
Secondary unload voltage	V	4.3~3.8	4.3~3.8	5.4~4.5	5.4~4.5	5.8~5.0	5.8~5.0	6.7~5.8	6.7~5.8	9.2~8.5	9.2~8.5	13.5~10.5	13.5~10.5
Secondary voltage regulator step		2	2	2	2	2	2	2	2	3	3	3	3
Maximum weld thickness for the A3 sheet	mm	0.5+0.5	0.5+0.5	0.8+0.8	0.8+0.8	1.0+1.0	1.0+1.0	1.2+1.2	1.2+1.2	1.5+1.5	1.5+1.5	2+2	2+2
The stroke of the welding wheel	mm	20~60	20~60	20~60	20~60	0~80	0~80	0~80	0~80	0~80	0~80	0~80	0~80
The speed of the welding	m/min	1~3	1~3	1~3	1~3	1~3	1~3	1~3	1~3	1~3	1~3	1~3	1~3
Max. strength of the weld wheel	N	3014	3014	4710	4710	12057	12057	12057	12057	12057	12057	18000	18000
Compressed air supply	MPa	0.6	0.6	0.6	0.6	0.6	0.6	0.6	0.6	0.6	0.6	0.6	0.6
The consumption of the compressed air	m^3/h	0.6	0.6	1	1	2.5	2.5	2.5	2.5	2.5	2.5	2.5	2.5
The consumpton of the cooling water	L/h	500	500	500	500	1000	1000	1000	1000	1000	1000	1000	1000
The power of the motor for the compressed air station	KW	1.5	1.5	1.5	1.5	1.5	1.5	1.5	1.5	1.5	1.5	1.5	1.5

Standard Resistance Welders

TECNA

Rocker Arm Welders
Press Welders
Transguns

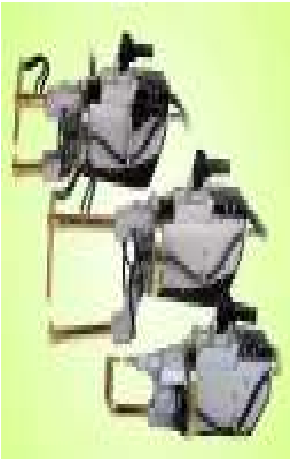

CEA

Rocker Arm Welders
Press Welders
Butt Welders



16 & 23 KVA Portable Transgun

Standard Supply includes:

- **Portable transgun with built in control**
- **Earth leakage and circuit breaker switch**
- **Air Filter Regulator unit with gauge**
- **Supply cables and hoses 6.5 m length**

Voltage and frequency to be always specified

Additional Equipment on Demand:

- **Arms and electrodes**
- **Different lengths of cables and hoses**
- **Spring Balancer**

* Pneumatic operated suspended gun, with integrated TE300 microprocessor welding control unit.
* High productivity achieved with rational design, reduced dimensions, high welding capacity.
* High electric efficiency.
* Reduced installation costs.
* Totally enclosed, rubber protected for easy and safe operation.
* Gyro suspension on sealed bearings together with a spring balancer guarantees accurate maneuverability at any degree.
* Rotation locking device.
* Large selection of arms, enabling to set-up the welder according to the work exigencies.
* Chrome-copper electrode-holders for heavy duty and long life, designed for both straight and angled assembling.
* Adjustable electrodes distance, adjustable short working stroke for heavy duty.
* Temporary extra stroke to reach the areas to be welded.
* Long working stroke to weld reinforcement ribs, jobs in areas difficult to be reached.
* Water-cooled transformer, with epoxy resin coated windings.
* Water cooled arms, electrode-holders and electrodes.
* Synchronous SCR contactor insulated from cooling water circuit with protection thermostat.
* Oil less chromium plated cylinder and shaft for heavy duty operation and long life.

16 KVA Specifications

ITEM	3322
Nominal Power at 50% (KVA)	23
Maximum Welding Power (KVA)	60.8
Short Circuit Current (KA)	20
No Load Secondary Voltage (V)	3.8
Supply Voltage (V)	220/440/550
Water Cooling (l/hr)	240
Delayed Fuse (A)	50
Minimum arms length (mm)	190
Max Electrode Force (6 bar – daN)	338
Maximum arms length (mm)	800
Max Electrode Force (6 bar – daN)	93
Max M.S. Sheet Thickness	
With Shortest Arms (mm)	4 + 4
With 508mm arms (mm)	3 + 3
With longest arms (mm)	2 + 2
Cross wire maximum (mm)	14 + 14
Net Weight incl. shortest arms (Kg)	44
Packaged dimensions (mm)	300x850x550

23 KVA Specifications

ITEM	3321
Nominal Power at 50% (KVA)	16
Maximum Welding Power (KVA)	33.2
Short Circuit Current (KA)	14.8
No Load Secondary Voltage (V)	2.8
Supply Voltage (V)	220/440/550
Water Cooling (l/hr)	240
Delayed Fuse (A)	35
Minimum arms length (mm)	190
Max Electrode Force (6 bar – daN)	286
Maximum arms length (mm)	650
Max Electrode Force (6 bar – daN)	95
Max M.S. Sheet Thickness	
With Shortest Arms (mm)	3 + 3
With 508mm arms (mm)	1.8 + 1.8
With longest arms (mm)	1.2 + 1.2
Cross wire maximum (mm)	10 + 10
Net Weight incl. shortest arms (Kg)	39
Packaged dimensions (mm)	300x850x550

Rainbow Electronics * Phone: 905-565-1980 * FAX: 905-565-1981 * E-MAIL: welding@ rainbow-electronics.com

TECNA 38 KVA Portable Transgun

Standard Supply includes:

- **Portable transgun with built in control**
- **Earth leakage and circuit breaker switch**
- **Air Filter Regulator unit with gauge**
- **Supply cables and hoses 6.5 m length**

Voltage and frequency to be always specified

Additional Equipment on Demand:

- **Arms and electrodes**
- **Different lengths of cables and hoses**
- **Spring Balancer**

* Pneumatic operated suspended gun, with integrated TE300 microprocessor welding control unit.
* High productivity achieved with rational design, reduced dimensions, high welding capacity.
* High electric efficiency.
* Reduced installation costs.
* Totally enclosed, rubber protected for easy and safe operation.
* Gyro suspension on sealed bearings together with a spring balancer guarantees accurate maneuverability at any degree.
* Rotation locking device.
* Large selection of arms, enabling to set-up the welder according to the work exigencies.
* Chrome-copper electrode-holders for heavy duty and long life, designed for both straight and angled assembling.
* Adjustable electrodes distance, adjustable short working stroke for heavy duty.
* Temporary extra stroke to reach the areas to be welded.
* Long working stroke to weld reinforcement ribs, jobs in areas difficult to be reached.
* Water-cooled transformer, with epoxy resin coated windings.
* Water cooled arms, electrode-holders and electrodes.
* Synchronous SCR contactor insulated from cooling water circuit with protection thermostat.
* Oil less chromium plated cylinder and shaft for heavy duty operation and long life.

38 KVA Specifications

ITEM	3327
Nominal Power at 50% (KVA)	38
Maximum Welding Power (KVA)	108
Short Circuit Current (KA)	27
No Load Secondary Voltage (V)	5
Supply Voltage (V)	220/440/550
Water Cooling (l/hr)	360
Delayed Fuse (A)	65
Minimum arms length (mm)	250
Max Electrode Force (6 bar – daN)	695
Maximum arms length (mm)	1030
Max Electrode Force (6 bar – daN)	156
Max M.S. Sheet Thickness	
With Shortest Arms (mm)	5 + 5
With 508mm arms (mm)	3.5 + 3.5
With longest arms (mm)	2 + 2
Cross wire maximum (mm)	16 + 16
Net Weight incl. shortest arms (Kg)	119
Packaged dimensions (mm)	760x1050x500

Rainbow Electronics * Phone: 905-565-1980 * FAX: 905-565-1981 * E-MAIL: welding@ rainbow-electronics.com

Auto Body Welder

ITEM		3450
Number of programs		2
Mains voltage/frequency*		400V 50Hz
Phases nr.		1
Nominal power at 50%	kVA	10
Maximum welding power	kVA	50
Short circuit secondary current	kA	8
Secondary current at 100%	kA	0.88
No load secondary voltage	V	8
Delayed fuses	A	25
Mains cables section L=15m	mm^2	6 x 3
Thermal class		F
Protection degree		IP21
Max. compressed air pressure	bar	8
Net weight	kg	105
Gross weight	kg	120
Package dimensions	cm	59x68x92

Carbody shop repairing works: resistance spot welding of sheets , sheet straightening with spotter (nails or washers), localised sheets heating (carbon electrode), screws and rivets welding, inox sheet-metals spotting.

Synchronous digital welding control unit TE95 with double program, welding time adjustment in cycles and pulses; welding current adjustment and compensation function.

Allows simultaneous connection of two tools with automatic recall of the relevant memorized welding program, enabling to save time, avoid errors so to have a simple and safe working process.

STANDARD ACCESSORIES		**Smart gun:** patented pneumatic gun with adjustable stroke and double-function trigger: 1)only clamping, 2)welding, **when the force at electrodes is correct.** Item 8673 Ø18 mm Pneumatic gun with air and water cooling. Electrode force 30-150 daN.
		Item 8075 - Multifunction gun for the welding of screws, pins, washers, rivets and single spot. Cable L=2000 mm. Item 7638 - Percussion extractor. Star electrode for straightening.
		Item 3469 - Earth cable with brass clamp, L=2000 mm.
		Item 7639 Kit of consumable material; electrode for single-spot welding of pins, screws, washers and rivets, carbon electrode for localized heating; star electrode for sheets straightening.

OPTIONAL ACCESSORIES		Item 3491 Ø18 mm Hand-operated gun with air cooling. Electrode force 30-120 daN. Standard and large gap arms item
		Item 8651 Air and water cooled twin spot gun.
		Item 3696 Hand-operated C type gun, with air cooling. Reduced overall dimensions. Cables length 1600 mm. Electrode force 30-80 daN.

OPTIONAL ACCESSORIES		**Smart gun:** patented pneumatic gun with adjustable stroke and double-function trigger: 1)only clamping, 2)welding, **when the force at electrodes is correct.** Item 8672 Ø20 mm Pneumatic gun with air and water cooling. Electrode force 30-150 daN. Standard and large gap arms item 5001...5085 and item 5121...5185.
		**Smart gun:** patented pneumatic gun with adjustable stroke and double-function trigger: 1)only clamping, 2)welding, **when the force at electrodes is correct.** Item 8676 Ø20 mm Water cooled pneumatic gun. Electrode force 30-190 daN. Standard and large gap arms item 5121...5185.
		**FAST GUN** Pneumatic C-type gun water-cooled: Item 8659 - C gun. Item 8585 Arm (A). Item 8586 Arm (B). Item 8587 Arm (C). Item 3455 Welding cables L=2400mm.
		Item 3452 - water cooled cables L=1800 mm, 150 mm^2 section, for L type gun Item 3453 - water cooled cables L=2000 mm, 150 mm^2 section, for L type gun Item 3454 - water cooled cables L=2400 mm, 150 mm^2 section, for L type gun Item 3455 - water cooled cables L=2400 mm, 150 mm^2 section, for C type gun
		Item 8675 Water-cooling group with pneumatic pump.
		Item 8675/S Electric water-cooling group

(I) SELEZIONE DI BRACCI, ELETTRODI ED ACCESSORI

(GB) SELECTION OF ARMS, ELECTRODES AND ACCESSORIES

(D) WAHL DER ARME, ELEKTRODEN UND ZUBEHÖR.

Ø 18 mm - Raffreddati ad aria / Air-cooled / Luftgekühlt.

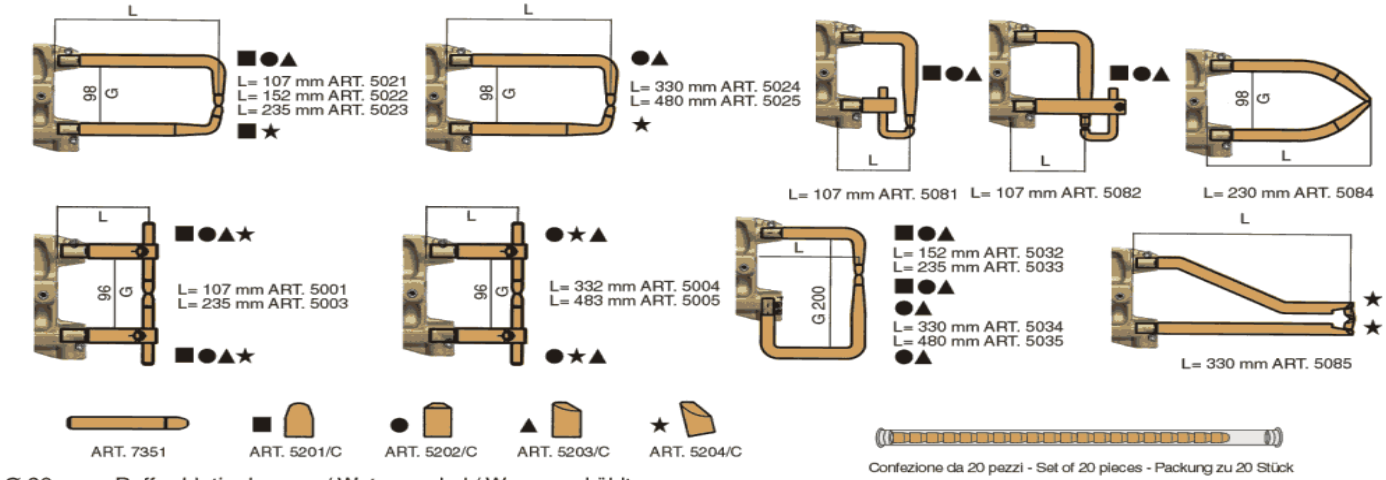

Ø 20 mm - Raffreddati ad acqua / Water-cooled / Wassergekühlt.

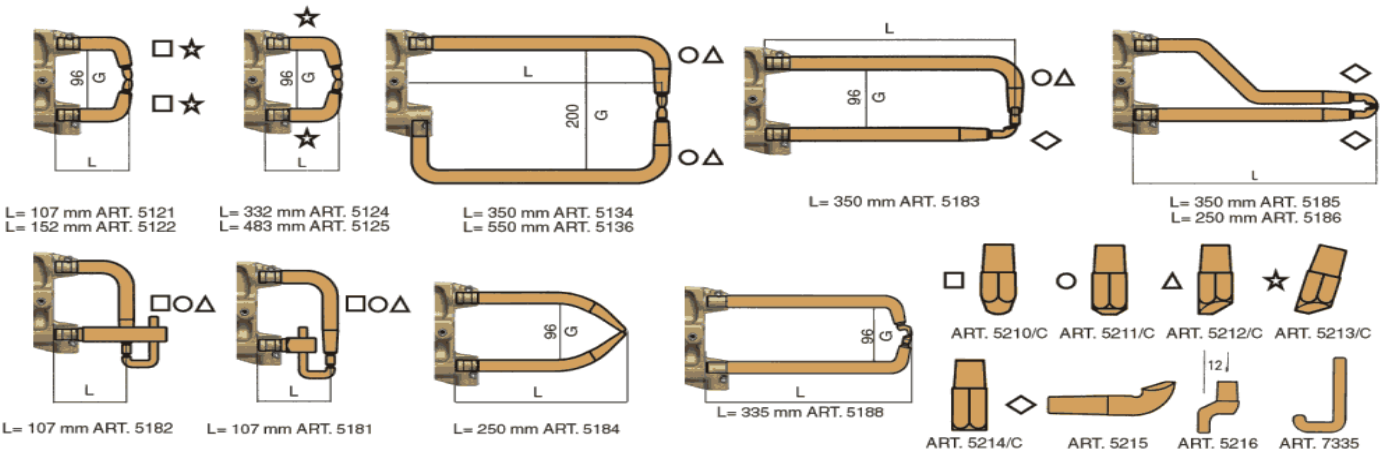

Ø 22 mm - Raffreddati ad acqua / Water-cooled / Wassergekühlt.

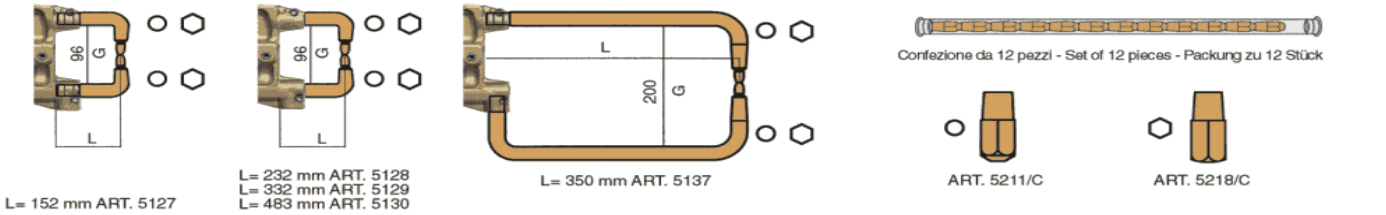

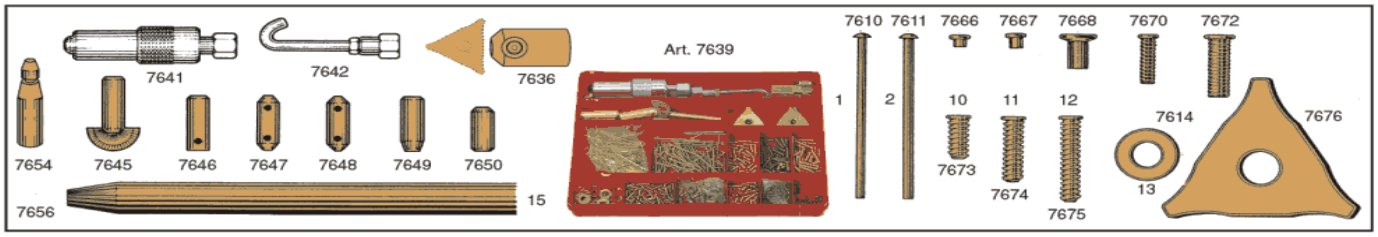

Auto Body Welder - Inverter #3664

GOTIS - GSP Online Technics Information System

Technical data

Specific data			**Dimensions and weights**		
Welding current	14000	A	Width	600	mm
Frequency range	1000	Hz	Height	1220	mm
Welding power max.	115	kVA	Depth	680	mm
Thermal overload protection	50	°C	Weight	120	kg
Electrical connection data			**Compressed-air connection data**		
Voltage	400	V	Operating pressure min./max.	8	bar
Frequency (input)	50	Hz			
Phases	3	Ph			
Mains fusing	32	A slow-blow			
Spot welding gun			**Water cooling unit**		
Electrode force	450	daN	Operating voltage	400	V
Diameter of electrodes	13	mm	Mains fusing	2	A
Diameter of welding cable	150	mm²	Cooling unit with water return cooling	Wärmetauscher	-
Length of welding cable, spot welding gun	3,5	m	Filling capacity, coolant	Wasser	-
Weight of spot welding gun	6,3	kg	Cooling temperature	23	°C
			Electrode arm water cooling	ja	-
			Electrode cap water cooling	ja	-

MFDC Inverter Welders

MFDC Inverter Welders available in many different styles and configurations. Choose from Press style projection welders, Rocker Arm Welders, Transgun welders, or custom designed welders. These are just a few examples of the MFDC Inverter welders we have manufactured.

220 KVA
MFDC Inverter

440 KVA
MFDC Inverter

55 KVA
MFDC Inverter
Bench Welder

300 KVA MFDC Inverter
Weld Aluminum to Bi-Metal
(Copper/Aluminum)

125 KVA
MFDC Inverter
Bench Welder

Custom Welders - Automotive

Custom Air Bag Compartment Welder:

THK Bearing System – Fiber Optic Parts Sensor – Safety Light Curtain – Pneumatic Glide System – PLC Control

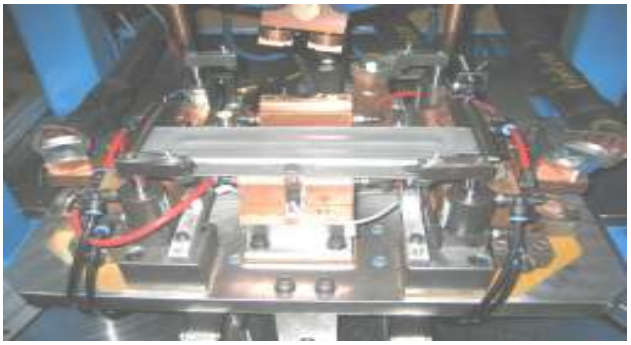

Custom Center Console Compartment Welder:

*Light Curtain *Parts Sensors *3 sets of THK Bearings Systems
*16 welds in less than 30 seconds

Custom Seat Adjustment Component Welder:

*Controlled by a Touch Screen Control *4 Station Turntable
*Parts Sensor *Light Curtain *8 pieces per minute *Capacitor Discharge

Custom Welders – Wire Product Manufacturing

Custom Wire Display Welder:

*4 Weld Cylinders c/w Barrel Clamp Assembly & Top Electrodes
*Medar Series Weld Control with Palm Button Operation *150 KVA Welding Transformer
*Automatic Parts Ejector System

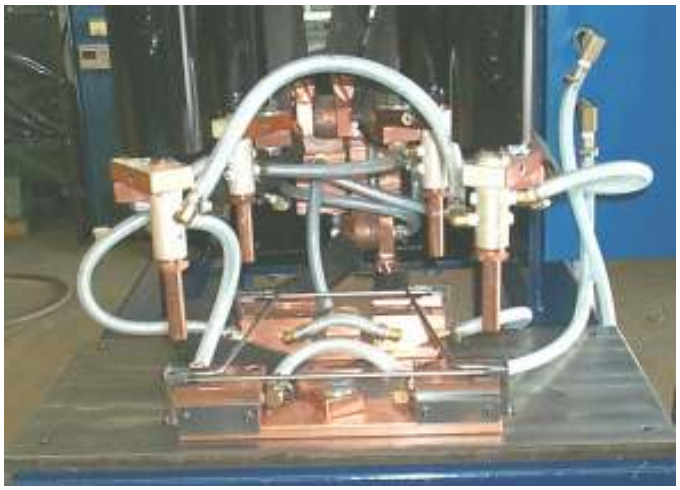

Custom Wire Welder:

*Many different configurations available
*Heavy Duty Frame Construction *Ergonomically Designed

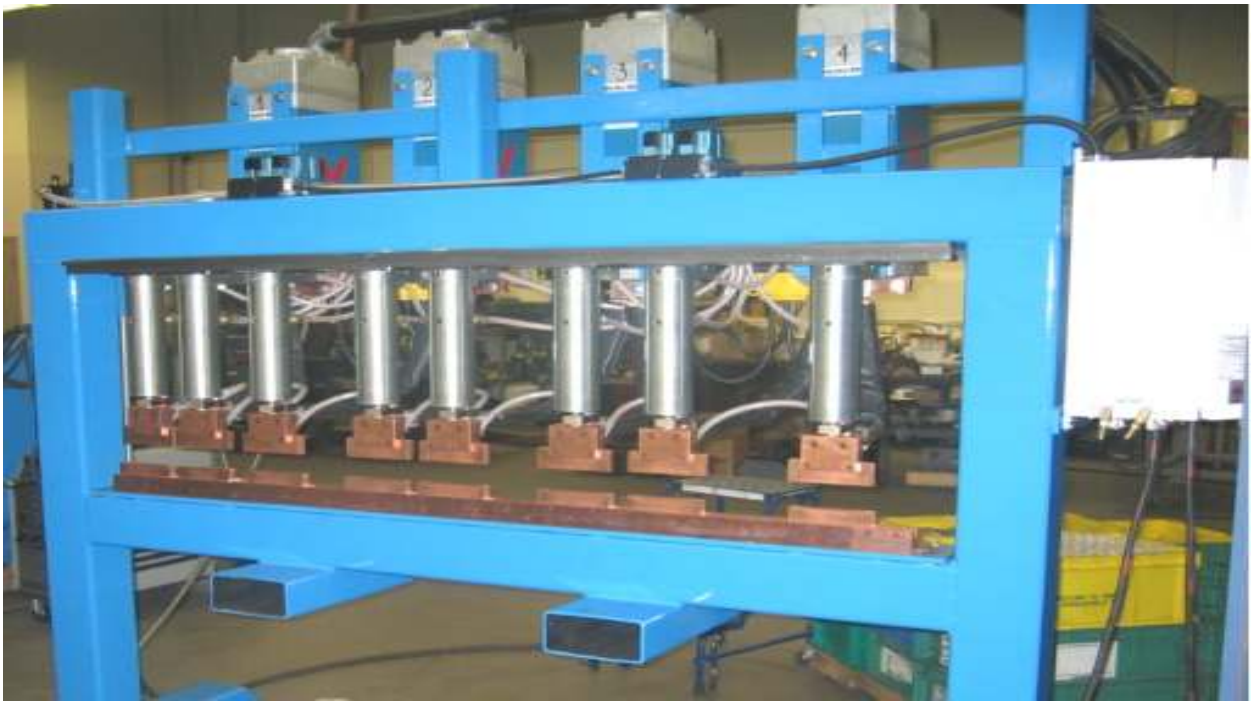

Custom Welders – Door Manufacturing

Custom Door Hinge Welder:

*Sliding Track *Extra Heavy Duty Cylinders
*Interchangeable Locating Fixtures

End Door Channel Welder:

*Top and bottom heavy duty weld cylinders with guide bushing and rod to prevent cylinder rotation
*Custom designed fixed central mandrel *Installed pneumatic grippers to holder U-channel in place for first weld
*Steel plate also installed for with dead stops for proper door/channel location
*Welder welds 13" both top and bottom at same time *Weld electrodes made to be quick change for dressing

Custom Welders – Tank Manufacturing

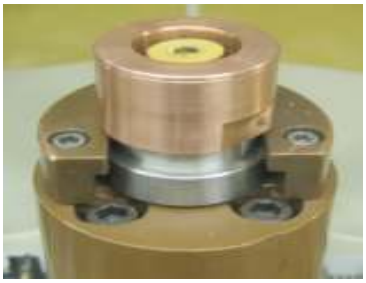

Capacitor Discharge Welder:

Weld Large Nut (seen below) to a Steel Tank – Super Clean Weld Finish – No Secondary Clean-up operation required

No Distortion or Damage to Threads

Short Weld Cycle – Only 20 ms!! Increased Productivity

Low Power Consumption – Only requires 100 KVA Input Power!!

Complete Safety Guarding – Heavy Duty Steel Frame

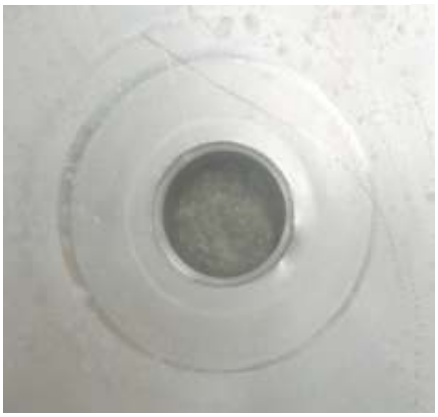

Custom Welders – Filing Cabinet Manufacturing

Custom Multi Gun Multi Size Cabinet Welder:

*16 Welding Guns *6 Different Welding Positions *Cascade Welding
*Designed Ergonomically *Infrared Light Curtain *2 Alternate Positioning Guns
*Complete Pneumatic Control

Custom Welders – Multi-Gun Wire Welder

Custom Multi-Gun Wire Welder:

*Simple Program Setting *Automatic Unloading *Each Welding Transformer can be individually controlled

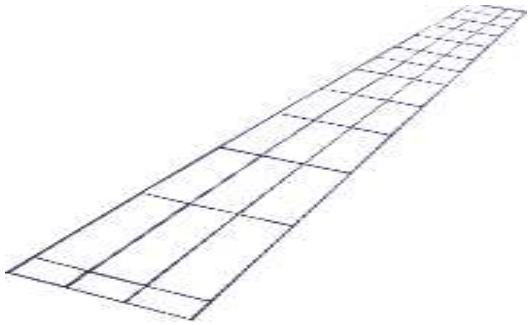

Other Custom Welders

Access Floor Welder

Kitchen Basin Welder

Custom Seam Welder

Nickel Welder

With an Extensive Engineering staff we are able to design and produce Custom Machinery ranging from the most simple designs to the most intricate of designs. Simply provide us with a sample work piece and let our Engineering Department design the appropriate Machine for your needs and requirements.

Rainbow Electronics * Phone: 905-565-1980 * FAX: 905-565-1981 * E-MAIL: welding@ rainbow-electronics.com

RECOMMENDED USES OF RESISTANCE WELDING MATERIALS

GROUP A COPPER-BASE ALLOYS
RWMA Class 1 alloy
CADMIUM-COPPER, suited to welding aluminum and magnesium alloys, coated materials, brass and bronze.

Class 1 alloy is superior to pure copper as an electrode material and is recommended as a general purpose material for resistance welding use. It may be used for spot welding electrodes, seam welding wheels and welding fixture components. It is not heat treatable.

RWMA Class 2 alloy
CHROMIUM-COPPER, suited to welding cold-and hot-rolled steels, stainless steel, and low-conductivity brasses and bronzes.

Class 2 alloy is a superior resistance welding electrode material, recommended for high-production operations. It's used for welding electrodes, projection welding dies, seam welding shafts and bearings, flash and butt welding dies, and current-carrying structural components. Available in forms for use as welding gun arms, welding platens and secondary-circuit structural members. It is heat treatable.

Z alloy
ZIRCONIUM-CHROMIUM-COPPER is suited to welding galvanized steel and other metallic-coated steel.

This is a specially heat-treated alloy which meets the minimum electrical conductivity and hardness specifications of Class 2 alloy.

RWMA Class 3 alloy
NICKEL-COPPER (55) and BERYLLIUM-NICKEL-COPPER (55A) are suited to welding steels having high electrical resistance, such as stainless steel.

Class 3 alloy is recommended for projection welding dies, and flash and butt welding dies. With its higher strength it is also used on highly-stressed current-carrying parts such as electrode shanks and heavy-duty electrode holders. It is heat treatable.

RWMA Class 4 alloy
BERYLLIUM-COPPER has extremely high hardness, and is recommended for projection, flash and butt welding dies. It has lower conductivity than Class 3 alloy but it is harder and more wear resistant. It should be considered where there is concern with high pressure density and severe wear, but where heating, due to its low conductivity, is not excessive.

It is used frequently in the form of inserts, die facings. and seam welder bushings. It is available in the annealed condition which is more readily machined and then subsequently heat treated.

GROUP B REFRACTORY METAL COMPOSITIONS

RWMA Class 10
TUNGSTEN 55%-COPPER 45%, suited for facings and inserts for projection welding electrodes and flash and butt welding dies. It is recommended where (relatively) high electrical conductivity and some degree of malleability is desired.

RWMA Class 11
TUNGSTEN 75%-COPPER 25%, suited to similar applications as Class 10, and for facing on electrode forming dies. It is harder than Class 10, and is for general use in projection welding electrodes.

RWMA Class 12
TUNGSTEN 80%-COPPER 20%, suited for electro-forming and electro-forging die facings, and for electrode facings used to upset studs and rivets. A material for heavy-duty projection welding electrodes and dies.

RWMA Class 13
TUNGSTEN

RWMA Class 14
MOLYBDENUM
Class 13 & 14 materials are used primarily for welding or electro-brazing non-ferrous metals having relatively high electrical conductivity. They are suited to cross-wire welding of copper and brass, and for welding copper wire braid to brass or bronze terminals. Special set-ups and procedures are required,

R.W.M.A. RECOMMENDED ELECTRODE MATERIALS FOR SPOT WELDING

Using Conventional Spot Welding Methods

LEGEND

Block Interpretation

WELDABILITY	↑ ELECTRODES AGAINST
← ELECTRODES AGAINST	SPECIAL INFORMATION

WELDABILITY
A- Excellent
B- Good

ELECTRODES, R.W.M.A. Specifications
I- Group A, Class 1
II- Group A, Class 2
III- Group A, Class 3

Materials indicated in squares are second choice, example

[II]

SPECIAL INFORMATION
1- Special conditions required
2 - Good practice recommends cleaning before welding
3 - If plating is heavy, we strength is questionable.

Data based on Resistance Welding Equipment Standards, Bulletin 16, a publication of the Resistance Welder Manufacturers Association

TO WELD SIMILAR METALS

FERROUS	Tin Plate Steel		Terne Plate Steel		Galvanized Iron Zinc Plate		Cadmium Plate Steel		Chrome Plate Steel		Stainless Steel 18-8 Type		Scaly H.R. Steel		C.R. Steel H.R. Steel (clean)	
READ BLOCK UNDER METAL TO BE WELDED	B	I	A	I	A	I [II]	B	I	A	II	A	III [II]	B	I II	A	II
	I	3	I	3	I [II]	3	I	3	II	3	III [II]		I II	2	II	

NON-FERROUS	Aluminum		Aluminum Alloys Duraluminum		Cupro Nickel		Nickel Silver		Nickel		Nickel Alloy Monel Nichome (High Res)		Brass Yellow 25-40% Zinc		Phosphor Bronze Grade A, C & D		Silicon Bronze Everdur Olympic Duronze Herculoy	
	B	I [II]	B	I [II]	A	II	B	II	A	II	A	II	B	II	AB	II	AB	II
	I [II]	2	I [II]	2	II		II		II		II		II		II		II	

Rainbow Electronics * Phone: 905-565-1980 * FAX: 905-565-1981 * E-MAIL: welding@ rainbow-electronics.com

WELDING DATA

TO WELD DISSIMILAR METALS

FERROUS ALLOYS	Stainless Steel 18-8 Type		Chrome Plate Steel		Cadmium Plate Steel		Galvanized Iron Zinc Plate		Terne Plate Steel		Tin Plate Steel	
Cold Rolled Steel Hot Rolled Steel, Clean	A	II III	A	II	B	II	B	I	A	I II	B	I
	III		II	3	II	3	II	3	II	3	II	3
Tin Plate Steel	B	II III	B	II	B	I II	B	I	B	I II		
	I		I	3	I	3	I	3	I	3		
Terne Plate Steel	B	II	B	II	B	I II	B	I				
	I	3	I	3	I	3	I	3				
Galvanized Iron Zinc Plate	B	II	B	II	B	I						
	I	3	I	3	I	3						
Cadmium Plate Steel	B	II	B	II								
	I	3	I	3								
Chrome Plate Steel	A	III II										
	II	3										

NON-FERROUS ALLOYS	Nickel Alloys		Nickel		Phosphor Broze		Silicon Bronze		Yellow Brass		Nickel Silver	
Cupro Nickel	B	II	B	II	B	II	B	II	B	II	B	II
	II		II		II		II		II		II	
Silicon Bronze Everdur – Olympic Bronze – Herculoy	B	II	B	II	B	II	A	II	B	II		
	II		II		II		II		II			
Nickel Silver	B	II	B	II	B	II	B	II				
	II	1	II		II	1	II					
Nickel Alloys	A	II	B	II								
	II		II									
Stainless Steel 8-8 Type	B	II	B	II								
	III II	1	II III	3								

	ALUMINUM	
ALUMINUM ALLOYS DURALUMINUM	B	I II
	I II	2

Rainbow Electronics * Phone: 905-565-1980 * FAX: 905-565-1981 * E-MAIL: welding@ rainbow-electronics.com

Complete Machine Shop services available:

- With our highly skilled Tool and Die Makers, we are able to machine and fabricate anything from the smallest jobs to the most complicated fixtures.
- Our shop is equipped with many Milling machines, Lathes, Surface Grinders and large capacity Radial Drills.
- We are also equipped with CNC Machining Centers to run production parts.

This is a small sample of some of the work we have done in our machine shop:















NOTES

NOTES

RAINBOW ELECTRONICS

ASME Certified

ASME SETTING THE STANDARD

Fully Accredited ASME Pressure Vessel Shop:

- **National Board Stamp**
- **H Stamp**
- **HLW Stamps**

TECHNICAL STANDARDS TSSA & SAFETY AUTHORITY

TSSA Certified welders and welding procedures:

- Mig Welding
- Tig Welding
- Tube to Tubesheet Welding